Digital – in the vehicle

Familiarize yourself with the contents of the Operator's Manual directly via the vehicle's multimedia system (menu item "Vehicle"). Start with the quick guide, discover your vehicle's highlights or broaden your knowledge with useful tips.

Vehicle document wallet

Here you can find comprehensive information about operating your vehicle and about services and warranties in printed form.

Digital – on the Internet

You can find the Operator's Manual on the Mercedes-Benz homepage.

Digital – as an App

The Mercedes-Benz Guides App is available free-of-charge in familiar App stores.

2225840312

Order no. P222 0284 13 Part no. 222 584 03 12
Edition B 2020

Apple® iOS

Android™

S-Class

Mercedes-Benz

S-Class

Operator's Manual

Mercedes-Benz

Front passenger airbag warning

Example

WARNING Risk of injury or fatal injuries if the front-passenger airbag is enabled

If the front-passenger front airbag is enabled, a child on the front-passenger seat may be struck by the front-passenger airbag during an accident.

NEVER use a rearward-facing child restraint system on a seat with an ENABLED FRONT AIRBAG, DEATH or SERIOUS INJURY to the CHILD can occur.

Observe the chapter "Children in the vehicle".

Publication details

Internet
Further information about Mercedes-Benz vehicles and about Mercedes-Benz AG can be found on the following websites:

https://www.mbusa.com (USA only)

https://www.mercedes-benz.ca (Canada only)

Documentation team
©Mercedes-Benz AG: not to be reprinted, translated or otherwise reproduced, in whole or in part, without written permission from Mercedes-Benz AG.

Vehicle manufacturer
Mercedes-Benz AG

Mercedesstrasse 120

70372 Stuttgart

Germany

As at 28.03.2019

Thank you for purchasing a Mercedes-Benz

Before you first drive off, read this Operator's Manual carefully and familiarize yourself with your vehicle. For your own safety and a longer operating lifespan of the vehicle, follow the instructions and warning notices in this Operator's Manual. Disregarding them may lead to damage to the vehicle or injury to people.

Damage to the vehicle resulting from the disregard of the instructions is not covered by the Mercedes-Benz Limited Warranty.

The standard equipment and product description of your vehicle may vary and depends on the following factors:

- Model
- Order
- National version
- Availability

Mercedes-Benz reserves the right to introduce changes in the following areas:

- Design
- Equipment
- Technical features

The equipment in your vehicle may therefore differ from that shown in the descriptions and illustrations.

The following documents are integral parts of the vehicle:

- Digital Operator's Manual
- Printed Operator's Manual
- Maintenance Booklet
- Equipment-dependent Supplements

Keep these documents in the vehicle at all times. If you sell the vehicle, always pass all of the documents on to the new owner.

Mercedes-Benz USA, LLC

Mercedes-Benz Canada, Inc.

A Mercedes-Benz Company

2225840312

Symbols **5**

At a glance **6**
Cockpit 6
Indicator and warning lamps 10
Overhead control panel 12
Door control panel and seat adjustment 14
Control settings in the rear passenger compartment 16
Emergencies and breakdowns 18

Digital Operator's Manual **20**
Calling up the Digital Operator's Manual 20

General notes **21**
Protection of the environment 21
Mercedes-Benz Genuine Parts 21
Operator's Manual 22
Service and vehicle operation 23
Operating safety 24
Declaration of conformity for wireless vehicle components 25
Diagnostics connection 26
Qualified specialist workshop 26
Correct use of the vehicle 27
Notes for persons with electronic medical aids 27
Problems with your vehicle 27
Reporting safety defects 28
Limited Warranty 28
QR code for rescue card 28
Data storage 28
Copyright 32

Occupant safety **33**
Restraint system 33
Seat belts 35
Airbags 40
PRE-SAFE® system 48
Safely transporting children in the vehicle 49
Notes on pets in the vehicle 63

Opening and closing **64**
SmartKey 64
Doors 69
Trunk 73
Side windows 79
Sliding sunroof 83
Roller sun blinds 91
Anti-theft protection 92

Seats and stowing **96**
Notes on the correct driver's seat position 96
Seats 96
Steering wheel 117
Easy entry and exit feature 118
Operating the memory function 120
Memory function in the rear passenger compartment 121
Stowage areas 125
Cup holder 135
Ashtray and cigarette lighter 138
Sockets 140
Refrigerator box 143
Wireless charging of the mobile phone and connection with the exterior antenna 145
Installing and removing the floor mats 147
Installing/removing the pennant staff 148

Light and visibility **150**
Exterior lighting 150
Interior lighting 155
Windshield wiper and windshield washer system 157
Mirrors 160
Operating the sun visors 162
Area permeable to radio waves on the windshield 163
Infrared-reflective windshield function 163

Climate control **164**
Overview of climate control systems 164
Operating the climate control system 165

Driving and parking **172**
Driving 172
DYNAMIC SELECT switch 183
Automatic transmission 184
Function of 4MATIC 188
Refueling 189
Parking 191
Driving and driving safety systems 200
Vehicle towing instructions 262

Instrument Display and on-board computer **263**
Instrument Display overview 263
Overview of the buttons on the steering wheel 264
Operating the on-board computer 264
Setting the design 266
Setting the area for additional values 266
Overview of displays on the multifunction display 267
Adjusting the instrument lighting 267
Menus and submenus 268
Head-up Display 274

Voice Control System **276**
Notes on operating safety 276
Operation 277
Using the Voice Control System effectively 278
Essential voice commands 279

Multimedia system **291**
Overview and operation 291
System settings 300
Fit & Healthy 312
Navigation 314
Telephone 339
Online and Internet functions 361
Media 367
Radio 379
Sound 387
Rear Seat Entertainment System 389

Maintenance and care **407**
ASSYST PLUS service interval display 407
Engine compartment 408
Cleaning and care 415

Breakdown assistance **425**
Emergency 425
Flat tire 425
Battery (vehicle) 431
Tow starting or towing away 436
Electrical fuses 442

Wheels and tires **446**
Notes on noise or unusual handling characteristics 446
Notes on regularly inspecting wheels and tires 446
Notes on snow chains 447
Tire pressure 448
Loading the vehicle 454
Tire labeling 459
Definition of terms for tires and loading 464
Changing a wheel 467
Emergency spare wheel 477

Technical data **478**
Notes on technical data 478
Vehicle electronics 478
Vehicle identification plate, VIN and engine number overview 480
Operating fluids 482
Vehicle data 489

Display messages and warning/indicator lamps **492**
Display messages 492
Warning and indicator lamps 541

Index **556**

In this Operator's Manual, you will find the following symbols:

⚠ **DANGER** Danger due to not observing the warning notices

Warning notices draw your attention to hazards that may endanger your health or life, or the health or life of others.

▶ Observe the warning notices.

ENVIRONMENTAL NOTE Environmental damage due to failure to observe environmental notes

Environmental notes include information on environmentally responsible behavior or environmentally responsible disposal.

▶ Observe environmental notes.

NOTE Damage to property due to failure to observe notes on material damage

Notes on material damage inform you of risks which may lead to your vehicle being damaged.

▶ Observe notes on material damage.

ⓘ Useful instructions or further information that could be helpful to you.

▶ Instruction

(→ page) Further information on a topic

Display Information on the multifunction display/media display

⟶ Highest menu level, which is to be selected in the multimedia system

▶▶ Corresponding submenus, which are to be selected in the multimedia system

* Marks a cause

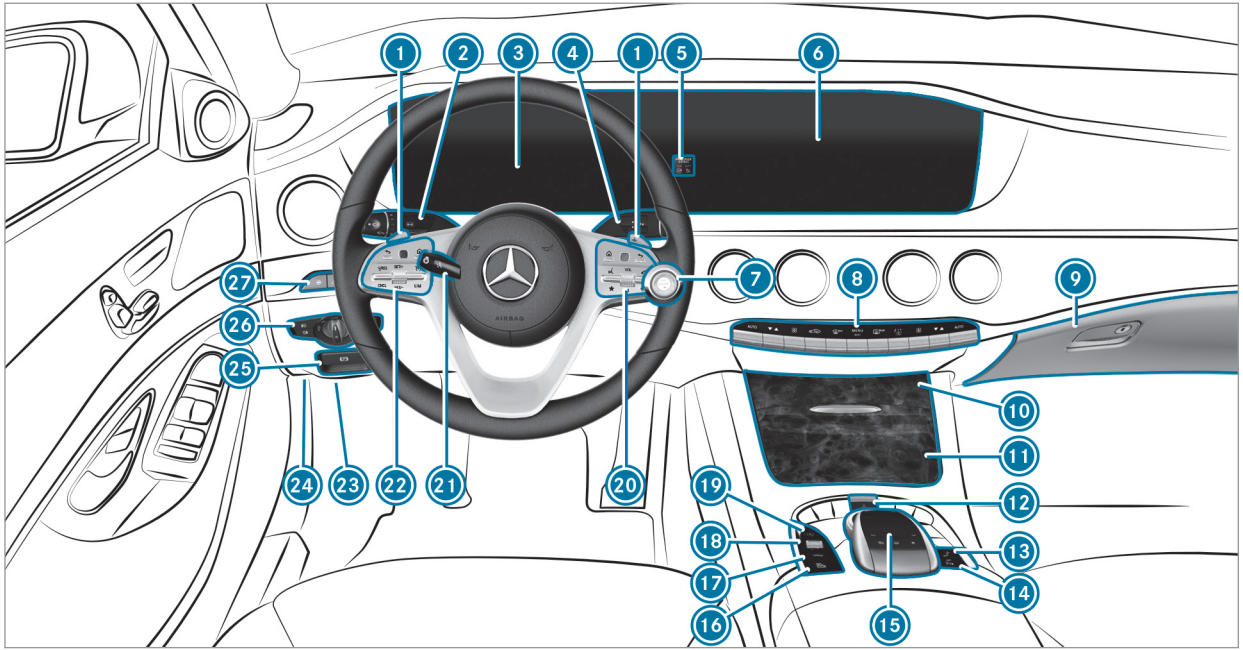
1
2
3
4
1
5
6
7
8
9
10
11
12
13
14
15
16
17
18
19
20
21
22
23
24
25
26
27

1 Steering wheel gearshift paddles	→	186
2 Combination switch	→	151
3 Instrument Display	→	263
4 DIRECT SELECT lever	→	184
5 PASSENGER AIR BAG indicator lamps	→	45
6 Media display	→	291
7 Start/stop button	→	173
8 Climate control systems	→	165
9 Glove box	→	128
10 Stowage compartment	→	127
11 Cup holder	→	135
12 Hazard warning lamps	→	152
13 Extends the rear seat head restraints	→	110
14 Parking Assist PARKTRONIC	→	237
15 Touchpad	→	292
16 Active Parking Assist	→	245
17 Sets the vehicle level	→	228
18 DYNAMIC SELECT switch	→	183
19 ECO start/stop function	→	181
20 Control panel for the multimedia system	→	264
21 Adjusts the steering wheel	→	117
Switches the steering wheel heater on/off	→	118
22 Control panel for:		
On-board computer	→	264
Cruise control	→	211
Active Distance Assist DISTRONIC	→	214
23 Diagnostics connection	→	26
24 Opens the hood	→	409
25 Electric parking brake	→	197
26 Light switch	→	150
27 Control panel for:		
Active Steering Assist	→	220
Active Lane Keeping Assist	→	261
Night View Assist	→	255

Head-up Display → 275

Rear-window roller sunblind → 91

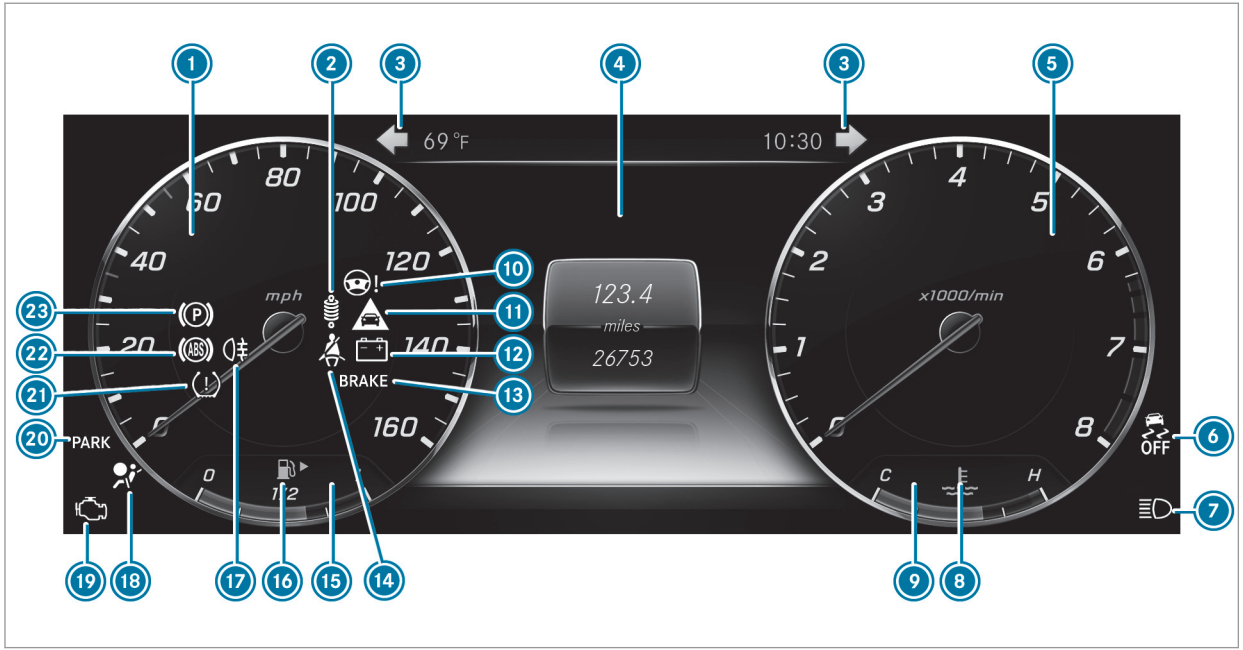

Instrument Display

1	Speedometer	→	263
2	Suspension malfunction	→	550
3	Turn signal lights	→	151
4	Multifunction display	→	267
5	Tachometer	→	263
6	ESP® OFF	→	551
	ESP®	→	551
7	High beam	→	151
	Low beam	→	150
	Parking lamps	→	150
8	Coolant too hot/cold	→	545
9	Coolant temperature display	→	263
10	Electric power steering malfunction	→	544
11	Distance warning	→	550
12	Electrical malfunction	→	545
13	Brakes (red)	→	548
	BRAKE USA only		
	Canada only		
14	Seat belt not fastened	→	543
15	Fuel level indicator		
16	Fuel reserve with fuel filler cap location indicator	→	545
17	Rear fog light	→	151
18	Restraint system	→	543
19	Check Engine	→	545
20	Electric parking brake applied (red)	→	548
	PARK USA only		
	Canada only		
21	Tire pressure monitor	→	554
22	ABS malfunction	→	551
23	Electric parking brake (yellow)	→	548

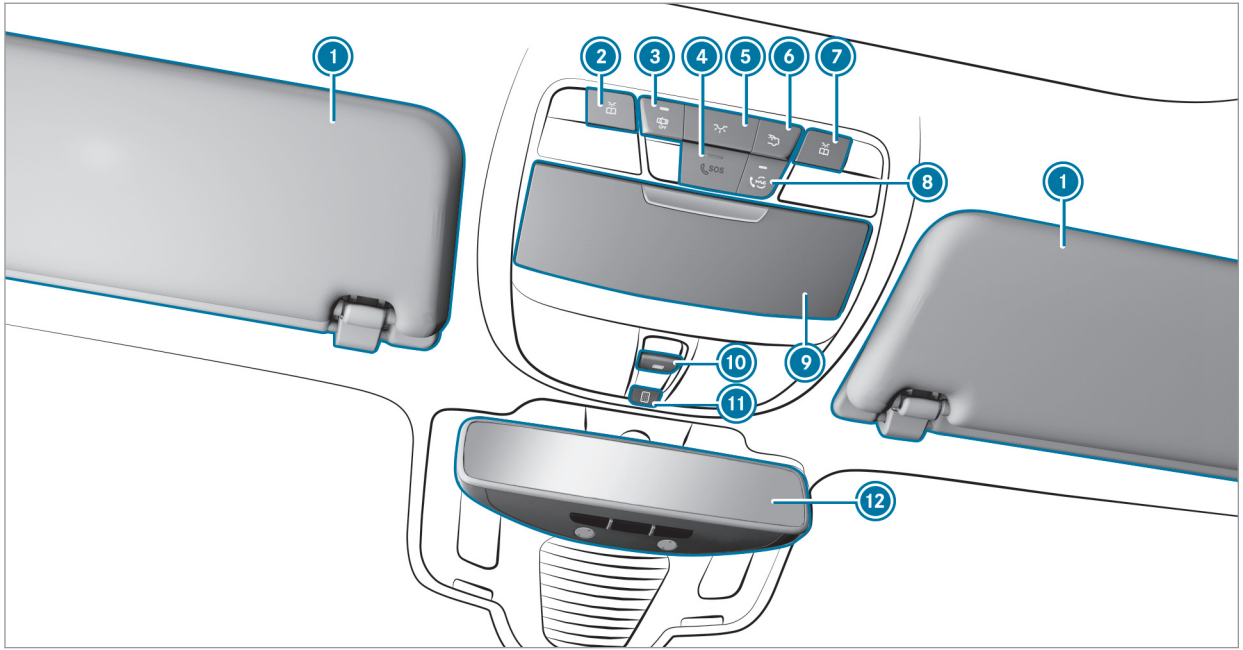
1
2
3
4
5
6
7
8
1
9
10
11
12

1	Sun visors	→	162
2	Switches the left-hand reading lamp on/off	→	155
3	Switches automatic light control on/off	→	155
4	SOS button	→	355
5	Switches the front interior lighting on/off	→	155
6	Switches the rear interior lighting on/off	→	155
7	Switches the right-hand reading lamp on/off	→	155
8	me button	→	355
9	Eyeglasses compartment	→	128
10	Opens/closes the panorama roof with power tilt/sliding panel	→	83
	Opens/closes the front roller sunblind	→	83
11	Opens/closes the rear roller sunblind	→	83
	Operates MAGIC SKY CONTROL	→	87
12	Inside rearview mirror	→	161

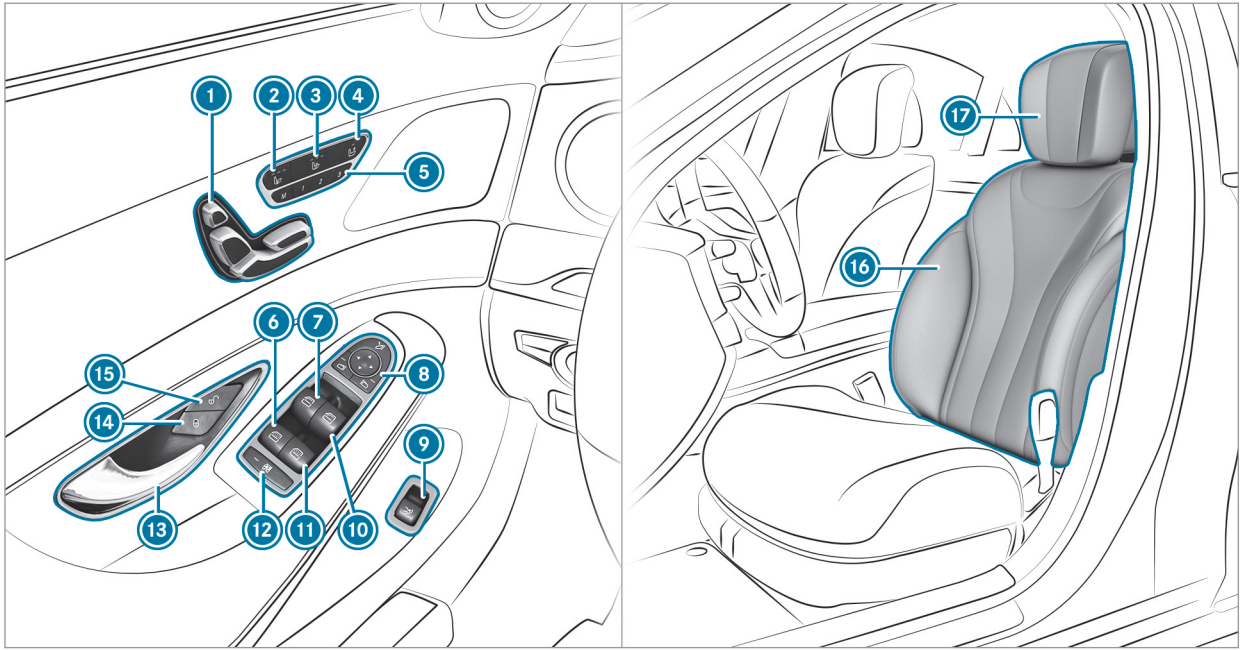
1
2
3
4
5
6
7
8
9
10
11
12
13
14
15
16
17

1	Adjusts the seats electrically	→	96
2	Switches the seat heating on/off	→	114
3	Switches the seat ventilation on/off	→	116
4	Adjusts the front passenger seat from the driver's seat	→	99
5	Sets the memory function	→	120
6	Opens/closes the rear left side window	→	79
7	Opens/closes the left side window	→	79
8	Adjusts and folds the outside mirrors out/in electrically	→	160
9	Opens/closes the trunk lid	→	73
10	Opens/closes the right side window	→	79
11	Opens/closes the rear right side window	→	79
12	Child safety lock for the rear passenger compartment side windows	→	63
13	Opens the door	→	69
14	Locks the vehicle	→	69
15	Unlocks the vehicle	→	69
16	Seat adjustment using the multimedia system	→	113
17	Adjusts the head restraints	→	108

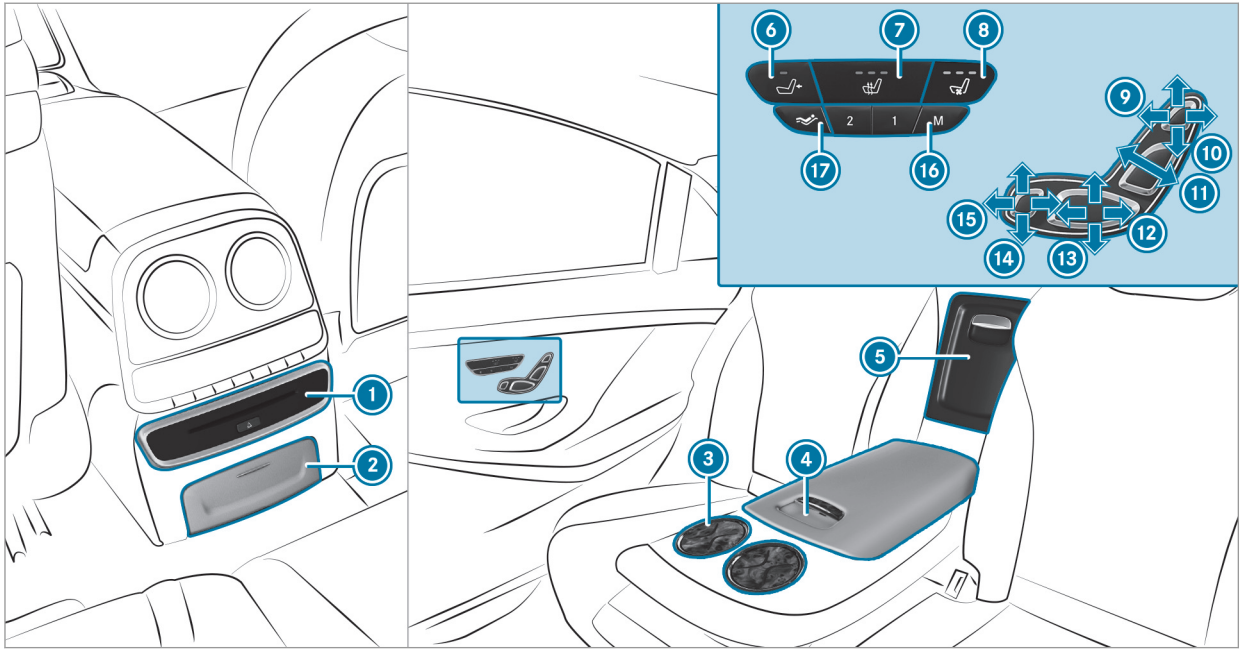

Vehicles with a reclining rear seat

1	Blu-ray/DVD drive	→	395
2	Cigarette lighter	→	139
	12 V socket	→	140
3	Cup holder	→	136
4	Stowage compartment in the rear armrest	→	129
5	Stowage box in the seat backrest	→	129
	Refrigerator box	→	143
6	Selects the front passenger seat	→	99
7	Switches the rear seat heating on/off	→	114
8	Switches the rear seat ventilation on/off	→	116
9	Sets the fore-and-aft position of the head restraint	→	102
10	Adjusts the height of the head restraint	→	102
11	Adjusts the seat backrest inclination	→	102
12	Sets the combined seat cushion inclination and length	→	102
13	Sets the combined seat cushion inclination and length	→	102
14	Adjusts the angle of the leg rest	→	102
15	Adjusts the fore-and-aft position of the leg rest	→	102
16	Memory function in the rear passenger compartment	→	121
17	Sets the fully reclined position	→	102

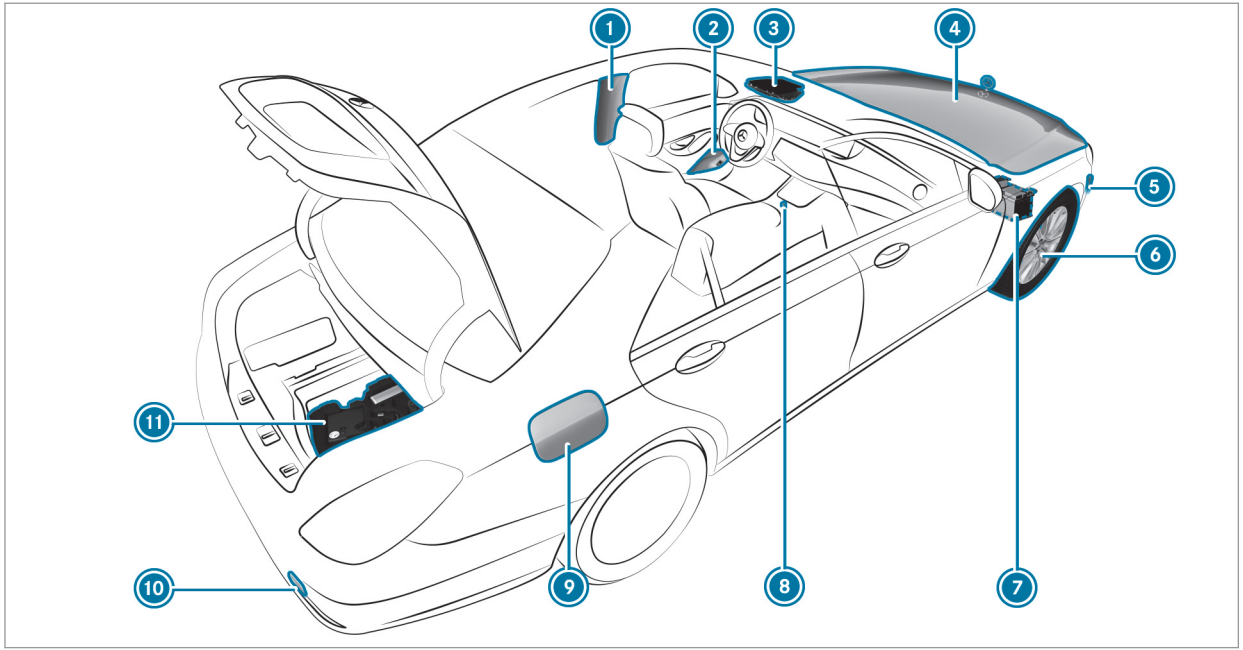
1
2
3
4
5
6
7
8
9
10
11

1 QR code for accessing the rescue card	→	28
2 Safety vests	→	425
3 me button and SOS button	→	355
4 Checking and adding operating fluids	→	482
5 Tow-starting and towing away	→	438
6 Flat tire	→	425
7 Starting assistance	→	435
8 Hazard warning lights	→	152
9 Fuel filler flap with instruction labels for tire pressure, fuel type and QR code for accessing the rescue card	→	189
10 Tow-starting and towing away	→	438
11 TIREFIT kit	→	427

Calling up the Digital Operator's Manual

Multimedia system:

→ Vehicle ▸▸ ⓘ Operator's Manual

▶ Select a menu item.

In addition, you can also call up the Operator's Manual within a main function (e.g. via Media Info).

The Digital Operator's Manual describes the function and operation of the vehicle and the multimedia system.

For safety reasons, the Digital Operator's Manual is deactivated while driving.

The Digital Operator's Manual contains the following menu items:

- Search: allows you to search precisely for keywords.
- Quick start: provides you with important information so that you can start using your vehicle immediately.
- Tips: provides tips on how to use your vehicle in certain situations.
- Messages: provides you with further information about the messages in the instrument cluster.
- Bookmarks: provides you with a list of all the bookmarks you have stored yourself.

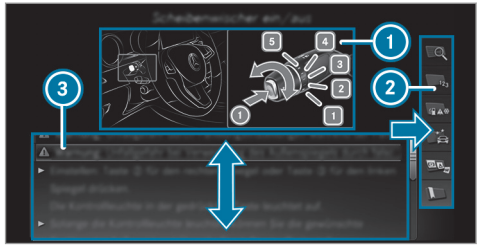

① Picture
② Menu
③ Navigation window

Some sections of the Digital Operator's Manual, such as warnings, can be made visible by highlighting and pressing them.

ⓘ The Operator's Manual can also be found in the Mercedes-Benz Guides app in all common app stores.

Protection of the environment

Plug-in hybrid: observe the notes in the Supplement. Otherwise, you may fail to recognize dangers.

ENVIRONMENTAL NOTE Environmental damage due to operating conditions and personal driving style

The pollutant emission of the vehicle is directly related to the way you operate the vehicle.

Operate your vehicle in an environmentally responsible manner to help protect the environment. Please observe the following recommendations on operating conditions and personal driving style.

Operating conditions:

- ▶ Make sure that the tire pressure is correct.
- ▶ Do not carry any unnecessary weight (e.g. roof luggage racks once you no longer need them).
- ▶ Adhere to the service intervals. A regularly serviced vehicle will contribute to environmental protection.
- ▶ Always have maintenance work carried out at a qualified specialist workshop.

Personal driving style:

- ▶ Do not depress the accelerator pedal when starting the engine.
- ▶ Do not warm up the engine while the vehicle is stationary.
- ▶ Drive carefully and maintain a suitable distance from the vehicle in front.
- ▶ Avoid frequent, sudden acceleration and braking.
- ▶ Change gear in good time and use each gear only up to ⅔ of its maximum engine speed.
- ▶ Switch off the engine in stationary traffic, e.g. by using the ECO start/stop function.
- ▶ Drive fuel-efficiently. Observe the ECO display for a fuel-efficient driving style.

Environmental issues and recommendations

It is recommended that you re-use or recycle materials instead of just disposing of them.

The relevant environmental guidelines and regulations serve to protect the environment and must be strictly observed.

Mercedes-Benz Genuine Parts

ENVIRONMENTAL NOTE Environmental damage caused by not using recycled reconditioned components

Mercedes-Benz AG offers recycled reconditioned components and parts with the same quality as new parts. The same entitlement from the Limited Warranty is valid as for new parts.

- ▶ Recycled reconditioned components and parts from Mercedes-Benz AG.

NOTE Impairment of the operating efficiency of the restraint systems from installing accessory parts or from repairs or welding

Airbags and Emergency Tensioning Devices, as well as control units and sensors for the restraint systems, may be installed in the following areas of your vehicle:

- Doors
- Door pillars
- Door sills
- Seats
- Cockpit
- Instrument cluster
- Center console
- Lateral roof frame

▶ Do not install accessory parts such as audio systems in these areas.

▶ Do not carry out repairs or welding.

▶ Have aftermarket installation of accessories carried out at a qualified specialist workshop.

You could jeopardize the operating safety of your vehicle if you use parts, tires and wheels as well as accessories relevant to safety which have not been approved by Mercedes-Benz. Safety-relevant systems, e.g. the brake system, may malfunction. Only use Mercedes-Benz Genuine Parts or parts of equal quality. Only use tires, wheels and accessories that have been specifically approved for your vehicle model.

Mercedes-Benz Genuine Parts are subject to strict quality control. Each part has been specially developed, manufactured or selected for Mercedes-Benz vehicles and fine-tuned for them. Therefore, only Mercedes-Benz Genuine Parts should be used.

More than 300,000 different Mercedes-Benz Genuine Parts are available for Mercedes-Benz models.

All authorized Mercedes-Benz Centers maintain a supply of Mercedes-Benz Genuine Parts for necessary service and repair work. In addition, strategically located parts delivery centers provide for quick and reliable parts service.

Always specify the vehicle identification number (VIN) (→ page 480) when ordering Mercedes-Benz Genuine Parts.

Operator's Manual

This Operator's Manual describes all models and all standard and optional equipment available for your vehicle at the time of this Operator's Manual going to press. Country-specific differences are possible. Note that your vehicle may not be equipped with all features described. This is also the case for systems and functions relevant to safety. Therefore, the equipment on your vehicle may differ from that in the descriptions and illustrations.

The original purchase agreement for your vehicle contains a list of all of the systems in your vehicle.

Should you have any questions concerning equipment and operation, please consult an authorized Mercedes-Benz Center.

The Operator's Manual and Maintenance Booklet are important documents and should be kept in the vehicle.

Service and vehicle operation

Vehicle operation outside the USA or Canada

When you are abroad with your vehicle, observe the following points:

- service points or replacement parts may not be available immediately.
- unleaded fuel may not be available for vehicles with a catalytic converter. Leaded fuel may cause damage to the catalytic converter.
- the fuel may have an extremely low octane number. Unsuitable fuel can cause engine damage.

Some Mercedes-Benz models are available in Europe through our European Delivery Program. For more information, please consult an authorized Mercedes-Benz service center, or write to one of the following address:

in the USA:

Mercedes-Benz USA, LLC

European Delivery Department

One Mercedes-Benz Drive

Sandy Springs, GA 30328

in Canada:

Mercedes-Benz Canada, Inc.

European Delivery Department

98 Vanderhoof Avenue

Toronto, Ontario M4G 4C9

Maintenance

Your customer advisor confirms the service in the service report.

Roadside Assistance

The Mercedes-Benz Roadside Assistance Program offers technical help in the case of a breakdown. Your calls to the toll-free Roadside Assistance Hotline are answered by our agents 24 hours a day, 365 days a year.

1-800-FOR-MERCedes (1-800-367-6372) (USA)

1-800-387-0100 (Canada)

You can find further information in the Mercedes-Benz Roadside Assistance Program brochure (USA) or the "Roadside Assistance" section in the Service and Warranty booklet (Canada). You will find both in the vehicle document wallet.

Change of address or change of ownership

In the event of a change of address, please send us the "Notification of address change" in the Service and Guarantee booklet or simply call the Mercedes-Benz Customer Assistance Center (USA) on the hotline number 1-800-FOR-MERCedes (1-800-367-6372) or Customer Service (Canada) on 1-800-387-0100. We can then reach you in a timely fashion, if necessary.

If you sell your Mercedes, please leave all literature in the vehicle so that it is available to the next owner. If you have purchased a used vehicle, please send us the "Notice of Purchase of Used Car" in the Service and Guarantee booklet or simply call the Mercedes-Benz Customer

Assistance Center (USA) at the hotline number 1-800-FOR-MERCedes (1-800-367-6372) or Customer Service (Canada) at 1-800-387-0100.

Possible danger due to substances hazardous to health

In compliance with Proposition 65 ("Prop65"), the following detachable label has been added to each vehicle sold in California:

WARNING

Operating, servicing and maintaining a passenger vehicle, pickup truck, van or off-road motor vehicle can expose you to chemicals including engine exhaust, carbon monoxide, phthalates, and lead, which are known to the State of California to cause cancer and birth defects or other reproductive harm. To minimize exposure, avoid breathing exhaust, do not idle the engine except as necessary, service your vehicle in a well-ventilated area and wear gloves or wash your hands frequently when servicing your vehicle. For more information go to www.P65Warnings.ca.gov/passenger-vehicle

A 000 817 82 02

Operating safety

Plug-in hybrid: observe the notes in the Supplement. Otherwise, you may fail to recognize dangers.

WARNING Risk of accident due to malfunctions or system failures

If you do not have the prescribed service/maintenance work or any required repairs carried out, this could result in malfunctions or system failures.

▶ Always have the prescribed service/maintenance work as well any required repairs carried out at a qualified specialist workshop.

WARNING Risk of accident and injury as a result of incorrect modifications to electronic component parts

Modification to electronic components, their software or wiring could impair their function and/or the function of other networked component parts. In particular, systems relevant to safety could also be affected.

As a result, they may no longer function as intended and/or endanger the operating safety of the vehicle.

▶ Never tamper with the wiring and electronic component parts or their software.

▶ You should have all work on electrical and electronic components carried out at a qualified specialist workshop.

Observe the "On-board electronics" section in "Technical data".

WARNING Risk of fire due to flammable materials on hot parts of the exhaust system

Flammable material such as leaves, grass or twigs may ignite if they come into contact with hot parts of the exhaust system.

- ▶ When driving on unpaved roads or off-road, regularly check the vehicle underside.
- ▶ Remove trapped plants or other flammable material.
- ▶ If there is damage, consult a qualified specialist workshop immediately.

! NOTE Damage to the vehicle

In the following situations, in particular, there is a risk of damage to the vehicle:

- The vehicle becomes grounded, e.g. on a high curb or an unpaved road
- The vehicle is driven too fast over an obstacle, e.g. a curb, speed bump or pothole
- A heavy object strikes the underbody or chassis components

In situations such as this, the body, the underbody, chassis components, wheels or tires could be damaged without the damage being visible. Components damaged in this way can unexpectedly fail or, in the case of an accident, may not absorb the loads that arise as intended.

If the underbody paneling is damaged, flammable materials such as leaves, grass or twigs can collect between the underbody and the underbody paneling. These materials may ignite if they come into contact with hot parts on the exhaust system.

- ▶ Have the vehicle checked and repaired immediately at a qualified specialist workshop.

or

- ▶ If driving safety is impaired while continuing your journey, pull over and stop the vehicle immediately in accordance with the traffic conditions, and contact a qualified specialist workshop.

Declaration of conformity for wireless vehicle components

USA: "The wireless devices of this vehicle comply with Part 15 of the FCC Rules. Operation is subject to the following two conditions: 1) These devices may not cause harmful interference, and 2) These devices must accept any interference received, including interference that may cause undesired operation. Changes or modifications not expressly approved by the party responsible for compliance could void the user's authority to operate the equipment."

Canada: "The wireless devices of this vehicle comply with Industry Canada license-exempt RSS standard(s). Operation is subject to the following two conditions: (1) These devices may not cause interference, and (2) These devices must accept any interference, including interference that may cause undesired operation of the device."

USA: "Wireless charging system for mobile devices (Model: D-WMI2015A): this device complies with Part 18 of the FCC Rules."

The name and address of the responsible party is:

Continental Automotive Systems US Inc.

2400 Executive Hills Drive

Auburn Hills, MI 48326-2980

United States of America

Diagnostics connection

The diagnostics connection is only intended for the connection of diagnostic devices at a qualified specialist workshop.

WARNING Risk of accident due to connecting devices to the diagnostics connection

If you connect equipment to a diagnostics connection in the vehicle, it may affect the operation of vehicle systems.

As a result, the operating safety of the vehicle could be affected.

- Only connect the vehicle diagnostics connection to devices which have been tested with regard to their use and are considered safe.

WARNING Risk of accident due to objects in the driver's footwell

Objects in the driver's footwell may impede pedal travel or block a depressed pedal.

This jeopardizes the operating and road safety of the vehicle.

- Stow all objects in the vehicle securely so that they cannot get into the driver's footwell.
- Always install the floor mats securely and as prescribed in order to ensure that there is always sufficient room for the pedals.
- Do not use loose floor mats and do not place floor mats on top of one another.

NOTE Battery discharging from using devices connected to the diagnostics connection

Using devices at the diagnostics connection drains the battery.

- Check the charge level of the battery.
- If the charge level is low, charge the battery, e.g. by driving a considerable distance.

Connecting equipment to the diagnostics connection can lead to emissions monitoring information being reset, for example. This may lead to the vehicle failing to meet the requirements of the next emissions inspection during the main inspection.

Qualified specialist workshop

Plug-in hybrid: observe the notes in the Supplement. Otherwise, you may fail to recognize dangers.

An authorized Mercedes-Benz Center is a qualified specialist workshop. It has the necessary special skills, tools and qualifications to correctly carry out the work required on your vehicle. This particularly applies to safety-relevant works.

Always have the following work carried out on your vehicle at a qualified specialist workshop:

- Safety-relevant works
- Service and maintenance work
- Repair work
- Modifications as well as installations and conversions
- Work on electronic components

Mercedes-Benz recommends a Mercedes-Benz service center.

Correct use of the vehicle

If you remove any warning stickers, you or others could fail to recognize certain dangers. Leave warning stickers in position.

Observe the following information in particular when driving your vehicle:

- the safety notes in this manual
- technical data for the vehicle
- traffic rules and regulations
- laws and safety standards pertaining to motor vehicles

Notes for persons with electronic medical aids

Mercedes-Benz AG cannot, despite carefully developing vehicle systems, completely rule out the interaction of vehicle systems with electronic medical aids such as cardiac pacemakers.

For this reason, the following can occur in isolated cases, depending on the aids used:

- Aids malfunctioning
- Adverse health effects

Observe the notes and warnings of the manufacturer of the aids; if in doubt, contact the device manufacturer and your doctor. Mercedes-Benz AG recommends using only few electrical vehicle systems if there is continuing uncertainty concerning the possibility of aids malfunctioning.

Have repairs and maintenance work in the area of vehicle components carrying live voltage and transmission antennas carried out by a qualified specialist workshop.

Problems with your vehicle

If you should experience a problem with your vehicle, particularly one that you believe may affect its safe operation, we urge you to contact an authorized Mercedes-Benz Center immediately to have the problem diagnosed and rectified. If the problem is not resolved to your satisfaction, please discuss the problem again with an authorized Mercedes-Benz Center or, if necessary, contact us at one of the following addresses:

In the USA:

Mercedes-Benz USA, LLC

Customer Assistance Center

One Mercedes-Benz Drive

Sandy Springs, GA 30328

In Canada:

Mercedes-Benz Canada, Inc.

Customer Relations Department

98 Vanderhoof Avenue

Toronto, Ontario M4G 4C9

Reporting safety defects

USA only:
The following text is published as required of manufacturers under Title 49, Code of U.S. Federal Regulations, Part 575 pursuant to the "National Traffic and Motor Vehicle Safety Act of 1966".

If you believe that your vehicle has a defect which could cause a crash or could cause injury or death, you should immediately inform the National Highway Traffic Safety Administration (NHTSA) in addition to notifying Mercedes-Benz USA, LLC.

If NHTSA receives similar complaints, it may open an investigation, and if it finds that a safety defect exists in a group of vehicles, it may order a recall and remedy campaign. However, NHTSA cannot become involved in individual problems between you, your dealer, or Mercedes-Benz USA, LLC.

To contact NHTSA, you may call the Vehicle Safety Hotline toll-free at 1-888-327-4236 (TTY: 1-800-424-9153); go to https://www.safercar.gov; or write to: Administrator, NHTSA, 400 Seventh Street, SW., Washington, DC 20590, USA.

You can also obtain other information about motor vehicle safety from: https://www.safercar.gov

Limited Warranty

! **NOTE** Damage to the vehicle arising from violation of these operating instructions.

Damage to the vehicle can arise from violation of these operating instructions.

This damage is not covered either by the Mercedes-Benz implied warranty or by the New- or Used-Vehicle Warranty.

▶ Follow the instructions in these operating instructions on proper operation of your vehicle as well as on possible vehicle damage.

QR code for rescue card

The QR code is secured in the fuel filler flap and on the opposite side on the B-pillar. In the event of an accident, rescue services can use the QR code to quickly find the appropriate rescue card for your vehicle. The current rescue card contains the most important information about your vehicle in a compact form, e.g. the routing of the electric lines.

Further information can be obtained at https://www.mercedes-benz.de/qr-code.

Data storage

Electronic control units

Electronic control units are installed in your vehicle. Some of these are necessary for the safe operation of your vehicle, while some assist you when driving (driver assistance systems). In addition, your vehicle provides comfort and

entertainment functions, which are also made possible by electronic control units.

Electronic control units contain data memories which can temporarily or permanently store technical information about the vehicle's operating state, component loads, maintenance requirements and technical events or malfunctions.

In general, this information documents the state of a component part, a module, a system or the surroundings such as:

- Operating status of system components (e.g. fill levels, battery status, tire pressure)
- Status messages concerning the vehicle or its individual components (e.g. number of wheel revolutions/speed, longitudinal acceleration, lateral acceleration, display of fastened seat belts)
- Malfunctions or faults in important system components (e.g. lights, brakes)
- Information on events leading to vehicle damage
- System reactions in special driving situations (e.g. airbag deployment, intervention of stability control systems)
- Ambient conditions (e.g. temperature, rain sensor)

In addition to providing the actual control unit function, this data assists the manufacturer in detecting and rectifying malfunctions and optimizing vehicle functions. The majority of this data is temporary and is only processed in the vehicle itself. Only a small portion of the data is stored in the event or fault memory.

When your vehicle is serviced, technical data from the vehicle can be read out by service network employees (e.g. workshops, manufacturers) or third parties (e.g. breakdown services). Services include repair services, maintenance processes, warranty claims and quality assurance measures, for example. The read out is performed via the legally prescribed port for the diagnostics connection in the vehicle. The respective service network locations or third parties collect, process and use the data. They document technical statuses of the vehicle, assist in finding malfunctions and improving quality and are transmitted to the manufacturer, if necessary. Furthermore, the manufacturer is subject to product liability. For this, the manufacturer requires technical data from vehicles.

Fault memories in the vehicle can be reset by a service outlet as part of repair or maintenance work.

Depending on the selected equipment, you can import data into vehicle convenience and infotainment functions yourself.

This includes, for example:

- Multimedia data such as music, films or photos for playback in an integrated multimedia system
- Address book data for use in connection with an integrated hands-free system or an integrated navigation system
- Entered navigation destinations
- Data about the use of Internet services

This data can be saved locally in the vehicle or it is located on a device which you have connected to the vehicle (e.g. a smartphone, USB flash

drive or MP3 player). If this data is stored in the vehicle, you can delete it at any time. This data is sent to third parties only at your request, particularly when you use online services in accordance with the settings that you have selected.

You can store or change convenience settings/individualization in the vehicle at any time.

Depending on the equipment, this includes, for example:

- Settings for the seat and steering wheel positions
- Suspension and climate control settings
- Customizations such as interior lighting

If your vehicle is accordingly equipped, you can connect your smartphone or another mobile end device to the vehicle. You can control this by means of the control elements integrated in the vehicle. Images and audio from the smartphone can be output via the multimedia system. Certain information is simultaneously transferred to your smartphone.

Depending on the type of integration, this can include:

- General vehicle data
- Position data

This allows you to use selected apps on your smartphone, such as navigation or music playback. There is no further interaction between the smartphone and the vehicle; in particular, vehicle data is not directly accessible. Which type of further data processing occurs is determined by the provider of the specific app used. Which settings you can make, if any, depends on the specific app and the operating system of your smartphone.

Online services

Wireless network connection

If your vehicle has a wireless network connection, it enables data to be exchanged between your vehicle and additional systems. The wireless network connection is enabled via the vehicle's transmission and reception unit or via connected mobile end devices (e.g. smartphones).

Online functions can be used via the wireless network connection. This includes online services and applications/apps provided by the manufacturer or other providers.

Manufacturer's services

Regarding online services of the manufacturer, the individual functions are described by the manufacturer in a suitable place (e.g. Operator's Manual, website of the manufacturer) along with the relevant data protection information. Personal data may be used for the provision of online services. Data is exchanged via a secure connection, e.g. the manufacturer's designated IT systems. Personal data is collected, processed and used via the provision of services exclusively on the basis of legal permissions or with prior consent.

The services and functions (sometimes subject to a fee) can usually be activated or deactivated. In some cases, this also applies to the entire vehicle's data connection. This excludes, in particular, legally prescribed functions and services.

Third party services
If it is possible to use online services from other providers, these services are the responsibility of the provider in question and subject to that provider's data protection conditions and terms of use. The manufacturer has no influence on the content exchanged.

For this reason, please ask the service provider for information about the type, extent and purpose of the collection and use of personal data when services are provided by third parties.

Multimedia system/Mercedes me connect

If the vehicle is equipped with the multimedia system or Mercedes me connect, additional data about the vehicle's operation, the use of the vehicle in certain situations, and the location of the vehicle may be compiled by the multimedia system or Mercedes me connect.

For additional information please refer to the chapter "Multimedia system" and/or the Mercedes me connect Terms and Conditions.

Event data recorders

USA only:

This vehicle is equipped with an event data recorder (EDR). The main purpose of an EDR is to record, in certain crash or near crash-like situations, such as an airbag deployment or hitting a road obstacle, data that will assist in understanding how a vehicle's systems performed. The EDR is designed to record data related to vehicle dynamics and safety systems for a short period of time, typically 30 seconds or less.

The EDR in this vehicle is designed to record such data as:

- How various systems in your vehicle were operating
- Whether or not the driver and front passenger seat belts were buckled/fastened
- How far (if at all) the driver was depressing the accelerator and/or brake pedal and
- How fast the vehicle was traveling

This data can help provide a better understanding of the circumstances in which accidents and injuries occur. NOTE: EDR data is recorded by your vehicle only if a non-trivial crash situation occurs; no data is recorded by the EDR under normal driving conditions and no personal data (e.g. name, gender, age and accident location) is recorded. However, other parties, such as law enforcement, could combine EDR data with the type of personally identifying data routinely acquired during a crash investigation.

To read data recorded by an EDR, special equipment is required, and access to the vehicle or the EDR is needed. In addition to the vehicle manufacturer, other parties that have the special equipment, such as law enforcement, can read the information by accessing the vehicle or the EDR.

EDR data may be used in civil and criminal matters as a tool in accident reconstruction, accident claims and vehicle safety. Since the Crash Data Retrieval (CDR) tool that is used to extract data from the EDR is commercially available, Mercedes-Benz USA, LLC ("MBUSA") expressly disclaims any and all liability arising from the extraction of this information by unauthorized Mercedes-Benz personnel.

MBUSA will not share EDR data with others without the consent of the vehicle owner or, if the vehicle is leased, without the consent of the lessee. Exceptions to this representation include responses to subpoenas by law enforcement; by federal, state or local government; in connection with or arising out of litigation involving MBUSA or its subsidiaries and affiliates; or, as required by law.

Warning: The EDR is a component of the Restraint System Module. Tampering with, altering, modifying or removing the EDR component may result in a malfunction of the Restraint System Module and other systems.

State laws or regulations regarding EDRs that conflict with federal regulation are pre-empted. This means that in the event of such conflict, the federal regulation governs. As of December 2016, 17 states have enacted laws relating to EDRs.

Copyright

Free and open-source software

Information on license for free and open-source software used in your vehicle can be found on the data carrier in your vehicle document wallet and with updates on the following website:

http://www.mercedes-benz.com/opensource

Registered trademarks

- Bluetooth® is a registered trademark of Bluetooth SIG Inc.
- DTS™ is a registered trademark of DTS, Inc.
- Dolby® and MLP™ are registered trademarks of DOLBY Laboratories.
- BabySmart™, ESP® and PRE-SAFE® are registered trademarks of Mercedes-Benz AG.
- HomeLink® is a registered trademark of Johnson Controls.
- iPod® and iTunes® are registered trademarks of Apple Inc.
- Burmester® is a registered trademark of Burmester Audiosysteme GmbH.
- Microsoft® and Windows Media® are registered trademarks of Microsoft Corporation.
- SIRIUS® is a registered trademark of Sirius XM Radio Inc.
- HD Radio™ is a registered trademark of iBiquity Digital Corporation.
- Gracenote® is a registered trademark of Gracenote, Inc.
- ZAGATSurvey® and related brands are registered trademarks of ZagatSurvey, LLC.

Restraint system

Protection provided by the restraint system

The restraint system includes the following components:

- Seat belt system
- Airbags
- Child restraint system
- Child seat securing systems

The restraint system can help prevent the vehicle occupants from coming into contact with parts of the vehicle interior in the event of an accident. In the event of an accident, the restraint system can also reduce the forces to which the vehicle occupants are subjected.

A seat belt can only provide the best level of protection if it is worn correctly. Depending on the detected accident situation, Emergency Tensioning Devices and/or airbags supplement the protection offered by a correctly worn seat belt. Emergency Tensioning Devices and/or airbags are not deployed in every accident.

In order for the restraint system to provide the intended level of protection, each vehicle occupant must observe the following information:

- Fasten seat belts correctly.
- Sit in an almost upright seat position with their back against the seat backrest.
- Sit with their feet resting on the floor, if possible.
- Always secure persons under 5 ft (1.50 m) tall in an additional restraint system suitable for Mercedes-Benz vehicles.

However, no system available today can completely eliminate injuries and fatalities in every accident situation. In particular, the seat belt and airbag generally do not protect against objects penetrating the vehicle from the outside. It is also not possible to completely rule out the risk of injury caused by the airbag deploying.

Reduced restraint system protection

⚠ **WARNING** Risk of injury or death from modifications to the restraint system

The restraint system can no longer function correctly after alterations have been made.

The restraint system may then not protect the vehicle occupants as intended by failing in an accident or triggering unexpectedly, for example

▶ Never alter the parts of the restraint system.

▶ Never tamper with the wiring or any electronic component parts or their software.

If it is necessary to modify the vehicle to accommodate a person with disabilities, contact an authorized Mercedes-Benz Center for details.

USA only: for details, contact our Customer Assistance Center on 1-800-FOR-MERCedes (1-800-367-6372).

Restraint system functionality

When the ignition is switched on, a self-test is performed, during which the restraint system warning lamp lights up. It goes out no later than a few seconds after the vehicle is started. The components of the restraint system are then functional.

Malfunctioning restraint system

A malfunction has occurred in the restraint system if:

- The restraint system warning lamp does not light up when the ignition is switched on
- The restraint system warning lamp lights up continuously or repeatedly during a journey

WARNING Risk of injury due to malfunctions in the restraint system

If the restraint system is malfunctioning, restraint system components may be triggered unintentionally or may not deploy as intended during an accident. This may affect the Emergency Tensioning Devices or airbags, for example.

▶ Have the restraint system checked and repaired immediately at a qualified specialist workshop.

Function of the restraint system in an accident

How the restraint system works is determined by the severity of the impact detected and the type of accident anticipated:

- Frontal impact
- Rear impact
- Side impact
- Rollover

The activation thresholds for the components of the restraint system are determined based on the evaluation of the sensor values measured at various points in the vehicle. This process is preemptive in nature. The triggering/deployment of the components of the restraint system must take place in good time at the start of the collision.

Factors which can only be seen and measured after a collision has occurred do not play a decisive role in the deployment of an airbag. Nor do they provide an indication of airbag deployment.

The vehicle may be deformed significantly without an airbag being deployed. This is the case if only parts which are relatively easily deformed are affected and the rate of vehicle deceleration is not high. Conversely, an airbag may be deployed even though the vehicle suffers only minor deformation. If very rigid vehicle parts such as longitudinal members are hit, for example, this may result in sufficiently high levels of vehicle deceleration.

The components of the restraint system can be activated or deployed independently of each other:

Component	Detected deployment situation
Emergency Tensioning Devices	Frontal impact, rear impact, side impact, rollover
Driver's airbag, front passenger airbag	Frontal impact
Knee airbag	Frontal impact
Side airbag	Side impact
Window curtain airbag	Side impact, rollover, frontal impact
Belt airbag	Frontal impact
Cushionbag	Frontal impact

The front passenger airbag can only be deployed in an accident if the PASSENGER AIR BAG OFF indicator lamp is off. If the front passenger seat is occupied, make sure, both before and during the journey, that the status of the front passenger airbag is correct (→ page 45).

⚠ **WARNING** Risk of burns from hot air bag components

The air bag parts are hot after an air bag has been deployed.

▶ Do not touch the air bag parts.

▶ Have a deployed air bag replaced at a qualified specialist workshop as soon as possible.

Mercedes-Benz recommends that you have the vehicle towed to a qualified specialist workshop after an accident. Take this into account, particularly if an Emergency Tensioning Device is triggered or an airbag deployed.

If the Emergency Tensioning Devices are triggered or an airbag is deployed, you will hear a bang, and a small amount of powder may also be released:

- The bang will not generally affect your hearing.
- In general, the powder released is not hazardous to health but may cause short-term breathing difficulties to persons suffering from asthma or other pulmonary conditions.

  Provided it is safe to do so, leave the vehicle immediately or open the window in order to prevent breathing difficulties.

Airbags and pyrotechnic Emergency Tensioning Devices contain perchlorate material, which may require special handling or environmental protection measures. National guidelines regarding waste disposal must be observed. In California, see http://www.dtsc.ca.gov/HazardousWaste/Perchlorate/index.cfm.

Seat belts

Protection provided by the seat belt

Always fasten your seat belt correctly before starting a journey. A seat belt can only provide the best level of protection if it is worn correctly.

WARNING Risk of injury or death due to incorrectly fastened seat belt

If the seat belt is not worn correctly, it cannot perform its intended protective function.

In addition, an incorrectly fastened seat belt can also cause injuries, for example, in the event of an accident or when braking or changing direction suddenly.

▶ Always ensure that all vehicle occupants have their seat belts fastened correctly and are sitting properly.

Always observe the instructions about the correct driver's seat position and adjusting the seat (→ page 96).

In order for the correctly worn seat belt to provide the intended level of protection, each vehicle occupant must observe the following information:

- The seat belt must not be twisted and must fit tightly and snugly across the body.
- The seat belt must be routed across the center of the shoulder and as low down across the hips as possible.
- The shoulder section of the seat belt should not touch your neck nor be routed under your arm or behind your back.
- Avoid wearing bulky clothing, e.g. a winter coat.
- Push the lap belt down as far as possible across your hips and pull tight with the shoulder section of the belt. Never route the lap belt across your abdomen.

  Pregnant women must also take particular care with this.
- Never route the seat belt across sharp, pointed, abrasive or fragile objects.
- Only one person should use each seat belt at any one time. Never allow babies and children to travel sitting on the lap of another vehicle occupant.
- Never secure objects with a seat belt if the seat belt is also being used by one of the vehicle's occupants. Always observe the instructions for loading the vehicle when securing objects, luggage or loads (→ page 125).

  Also ensure that no objects, e.g. a cushion, are ever placed between a person and the seat.

The seat belts on the following seats are equipped with a special seatbelt retractor:

- Front passenger seat
- Rear seats

Activate or deactivate the special seatbelt retractor (→ page 55).

If children are traveling in the vehicle, be sure to observe the instructions and safety notes on "Children in the vehicle" (→ page 50).

Limitations of the protection provided by the seat belt

⚠ **WARNING** Risk of injury or death due to incorrect seat position

The seat belt does not offer the intended level of protection if you have not moved the seat backrest to an almost vertical position.

When braking or in the event of an accident, you could slide underneath the seat belt and sustain abdominal or neck injuries, for example.

▶ Adjust the seat properly before beginning your journey.

▶ Always ensure that the seat backrest is in an almost vertical position and that the shoulder section of your seat belt is routed across the center of your shoulder.

⚠ **WARNING** Risk of injury or death when additional restraint systems are not used for persons with a smaller build

Persons under 5 ft (1.50 m) tall cannot wear the seat belt correctly without a suitable additional restraint system.

If the seat belt is not worn correctly, it cannot perform its intended protective function. In addition, an incorrectly fastened seat belt can also cause injuries, for example, in the event of an accident or when braking or changing direction suddenly.

▶ Always secure persons under 5 ft (1.50 m) tall in a suitable restraint system.

⚠ **WARNING** Risk of injury or death due to blocked seat belt buckle or seat belt anchorage

Objects next to the front seat that block the seat belt buckle or the moving seat belt anchorage on the front seat impair the function of the Emergency Tensioning Devices.

The Emergency Tensioning Devices can, then, not function as intended and the seat belt can no longer provide the intended protection.

▶ Before starting the journey, make sure that there are no objects around the seat belt buckle or between the front seat and door.

⚠ **WARNING** Risk of injury or death due to damaged or modified seat belts

Seat belts cannot provide protection in the following situations:

- The seat belt is damaged, has been modified, is extremely dirty, bleached or dyed
- The seat belt buckle is damaged or extremely dirty
- Modifications have been made to the Emergency Tensioning Device, seat belt anchorage or seat belt retractor

Seat belts may sustain non-visible damage in an accident, e.g. due to glass splinters.

Modified or damaged seat belts could tear or fail in the event of an accident, for example.

Modified Emergency Tensioning Devices may be deployed unintentionally or not function as intended.

- ▶ Never modify the seat belts, Emergency Tensioning Devices, seat belt anchorages or seat belt retractors.
- ▶ Make sure that the seat belts are not damaged, are not worn and are clean.
- ▶ Always have the seat belts checked immediately after an accident at a qualified specialist workshop.

Only use seat belts that are approved for your vehicle by Mercedes-Benz.

⚠ **WARNING** Risk of injury or death from deployed pyrotechnic Emergency Tensioning Devices

Pyrotechnic Emergency Tensioning Devices that have been deployed are no longer operational and are unable to perform their intended protective function.

- ▶ Therefore, have deployed pyrotechnic Emergency Tensioning Devices immediately replaced at a qualified specialist workshop.

Mercedes-Benz recommends that you have the vehicle towed to a qualified specialist workshop after an accident.

! **NOTE** Damage caused by trapping the seat belt

If an unused seat belt is not fully retracted, it may become trapped in the door or in the seat mechanism.

- ▶ Always ensure that an unused seat belt is fully retracted.

Information on the belt airbag in the rear seat belt

The BELTBAG identification indicates that a rear seat belt is equipped with a belt airbag.

When activated, the belt airbag increases the protected area of the vehicle occupant's ribcage.

⚠ **WARNING** Risk of injury or death through the use of a non-approved child restraint system

In an accident, the belt air bag may damage a non-approved or non-authorized child restraint system.

As a result, the child restraint system may not be able to provide the intended level of protection.

- ▶ Therefore, always use LATCH or LATCH-type (ISOFIX) to fasten a child seat equipped with an integrated restraint system.
- ▶ For vehicles equipped with the optional rear seat-belt air bags ("beltbag"), only use a Mercedes-Benz approved booster seat with integrated backrest.
- ▶ Never use an air bag equipped seat belt to fasten a front or rear-facing child seat or a non-approved booster seat.
- ▶ Please contact an authorized Mercedes-Benz Center for information on approved child restraint systems.

Fastening and adjusting seat belts

If the seat belt is pulled quickly or sharply, the seat belt retractor locks. The seat belt strap cannot be pulled out any further.

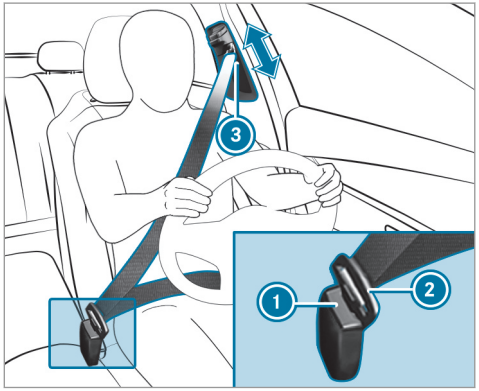

▶ Always engage seat belt tongue ② of the seat belt into seat belt buckle ① of the corresponding seat.

▶ Press and hold the seat belt outlet release and slide seat belt outlet ③ into the desired position.

▶ Let go of the seat belt outlet release and ensure that seat belt outlet ③ locks into position.

Vehicles with automatic front passenger airbag shutoff:

! **NOTE** Deployment of the Emergency Tensioning Device and side air bag when the front passenger seat is unoccupied

If the seat belt tongue is engaged in the seat belt buckle of the unoccupied front passenger seat, the Emergency Tensioning Device and the side air bag may also deploy in the event of an accident along with other systems.

▶ Only one person should use each seat belt at any one time.

Vehicles without automatic front passenger airbag shutoff:

! **NOTE** Deployment of the Emergency Tensioning Device when the front-passenger seat is unoccupied

If the seat belt tongue is engaged in the seat belt buckle of the unoccupied front-passenger seat, the Emergency Tensioning Device may also deploy in the event of an accident along with other systems.

▶ Only one person should use each seat belt at any one time.

Seat belt adjustment function

Vehicles with PRE-SAFE®: If the front seat belt is not pulled tightly across your body, the seat belt adjustment may automatically apply a certain tightening force. Do not hold the seat belt tightly while it is adjusting.

You can activate and deactivate the seat belt adjustment function using the multimedia system (→ page 40).

Function of the rear seat belt buckle extender

The seat belt buckle extender for the outer rear seats makes it easier to fasten the seat belt. Always ensure that the seat belt buckle can be extended and retracted freely.

After the seat belt is fastened, the seat belt buckle returns to its normal position. The seat belt then lies tightly across the lap and thorax areas.

Releasing seat belts

▶ Press the release button in the seat belt buckle and guide the seat belt back with the seat belt tongue.

Activating/deactivating seat belt adjustment via the multimedia system

Multimedia system:

→ Vehicle ▸▸ Vehicle Settings ▸▸ Belt Adjustment

▶ Activate ☑ or deactivate ☐ the function.

Seat belt warning function for the driver and front passenger

The seat belt warning lamp in the Instrument Display is a reminder that all vehicle occupants must wear their seat belts correctly.

The seat belt warning lamp lights up for six seconds every time the vehicle is started.

In addition, a warning tone may sound.

When the driver's and front passenger's doors are closed and the driver and front passenger have fastened their seat belts, the seat belt warning goes out.

In the following cases, the seat belt warning lights up during a journey if:

- The vehicle speed exceeds 15 mph (25 km/h) and the driver's or front passenger seat belt is not fastened.
- The driver or front passenger unfastens their seat belt while the vehicle is in motion.

Airbags

Overview of airbags

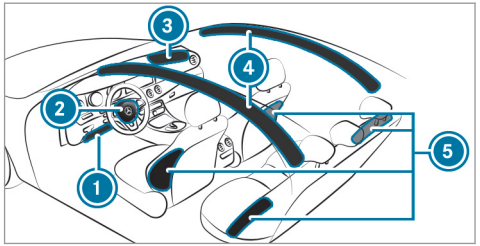

1. Knee airbag
2. Driver's airbag
3. Front passenger airbag
4. Window curtain airbag
5. Side airbag

The installation location of an airbag is identified by the AIRBAG symbol.

When enabled, an airbag can provide additional protection for the respective vehicle occupant.

Potential protection from each airbag:

AIRBAG	Potential protection for:
Knee airbag	Thigh, knee and lower leg
Driver's airbag, front passenger airbag	Head and ribcage
Window curtain airbag	Head
Side airbag	Ribcage, also pelvis for front seat occupants

WARNING Risk of injury or fatal injuries if the front-passenger airbag is enabled

If the front-passenger front airbag is enabled, a child on the front-passenger seat may be struck by the front-passenger airbag during an accident.

NEVER use a rearward-facing child restraint system on a seat with an ENABLED FRONT AIRBAG, DEATH or SERIOUS INJURY to the CHILD can occur.

When installing a child restraint system on the front passenger seat, observe the vehicle-specific information (→ page 60). Also, always observe the notes on rearward-facing or forward-facing child restraint systems on the front passenger seat.

Vehicles with automatic front passenger airbag shutoff:

The front passenger airbag can only be deployed in an accident if the PASSENGER AIR BAG OFF indicator lamp is off. If the front passenger seat is occupied, make sure, both before and during the journey, that the status of the front passenger airbag is correct (→ page 45).

NOTE Important points to remember if the front passenger seat is unoccupied

In an accident, the components of the restraint system may deploy unnecessarily on the front passenger side if:

- There are heavy objects on the front passenger seat.
- The seat belt tongue is engaged in the seat belt buckle of the front passenger seat and the front passenger seat is unoccupied.

▶ Stow objects in a suitable place.

▶ Only one person should use each seat belt at any one time.

Depending on the detected accident situation, the window curtain airbag on the front passenger side may deploy. The airbag is deployed regardless of whether the front passenger seat is occupied.

Cushionbag in the reclining rear seat

The cushionbag offers additional occupant protection in the event of frontal impacts. When activated, the cushionbag deploys under the seat cushion. This helps prevent the vehicle occupant from slipping off the seat cushion.

If you install a child restraint system on the reclining rear seat, always observe the additional notes (→ page 50).

Protection by the airbags

Depending on the accident situation, an airbag may supplement the protection offered by a correctly fastened seat belt.

⚠ **WARNING** Risk of injury or death due to incorrect seat position

If you deviate from the correct seat position, the airbag cannot perform its intended protective function and deployment may even cause further injuries.

In order to avoid risks, each vehicle occupant must always make sure of the following:

- Fasten seat belts correctly. Pregnant women must take particular care to ensure that the lap belt never lies across the abdomen.
- Adopt the correct seat position and keep as far away as possible from the airbags.
- Observe the following information.

▶ Always make sure that there are no objects between the airbag and vehicle occupant.

To avoid the risks resulting from the deployment of an airbag, each vehicle occupant must observe the following information in particular:

- Before starting your journey, adjust your seat correctly; the driver's seat and front passenger seat should be moved as far back as possible.

  When doing so, always observe the information on the correct driver's seat position (→ page 96).
- Only hold the steering wheel by the steering wheel rim. This allows the airbag to be fully deployed.
- Always lean against the seat backrest when the vehicle is in motion. Do not lean forwards or against the door or side window. You may otherwise be in the deployment area of the airbags.
- Always keep your feet on the floor. Do not put your feet on the cockpit, for example. Your feet may otherwise be in the deployment area of the airbag.
- If children are traveling in the vehicle, observe the additional notes (→ page 50).
- Always stow and secure objects correctly.

Objects in the vehicle interior may prevent an airbag from functioning correctly. Each vehicle occupant must always make sure of the following in particular:

- There are no people, animals or objects between the vehicle occupants and an airbag.
- There are no objects between the seat, door and door pillar (B-pillar).
- There are no hard objects, e.g. coat hangers, hanging on the grab handles or coat hooks.
- There are no accessory parts, such as mobile navigation devices, mobile phones or cup holders, attached to the vehicle within the deployment area of an airbag, e.g. on the cockpit, on the door, on the side window or on the side wall trim.

In addition, no connecting cables, tensioning straps or retaining straps must be routed or attached to the vehicle within the deployment area of an airbag. Always comply with the accessory manufacturer's installation instructions and, in particular, the notes on suitable places for installation.

- There are no heavy, sharp-edged or fragile objects in the pockets of your clothing. Store such objects in a suitable place.

Limited protection provided by airbags

⚠ **WARNING** Risk of injury due to modifications to the airbag cover

If you modify the cover of an airbag or affix objects such as stickers to it, the airbag may no longer function correctly.

▶ Never modify the cover of an airbag and do not affix objects to it.

The installation location of an airbag is identified by the AIRBAG symbol (→ page 40).

⚠ **WARNING** Risk of injury or death due to the use of unsuitable seat covers

Unsuitable seat covers can obstruct or prevent the deployment of air bags integrated into the seats.

Consequently, the air bags cannot protect vehicle occupants as they are designed to do. In addition, operation of the automatic front passenger air bag shutoff may be restricted.

▶ You should only use seat covers that have been approved for the corresponding seats by Mercedes-Benz.

⚠ **WARNING** Risk of injury due to malfunctions of the sensors in the door paneling

Sensors to control the airbags are located in the doors. Modifications or work not performed correctly to the doors or door paneling, as well as damaged doors, can lead to the function of the sensors being impaired. The airbags might therefore not function properly any more.

Consequently, the airbags cannot protect vehicle occupants as they are designed to do.

▶ Never modify the doors or parts of the doors.

▶ Always have work on the doors or door paneling carried out at a qualified specialist workshop.

⚠ **WARNING** Risk of injury due to deployed airbag

A deployed airbag no longer has a protective function and cannot protect as intended in the event of an accident.

▶ Have the vehicle towed to a qualified specialist workshop in order to have the deployed airbag replaced.

Have deployed airbags replaced immediately.

Status of the front passenger front airbag

Function of the automatic front passenger airbag shutoff

The automatic front passenger airbag shutoff is able to detect whether the front passenger seat is occupied by a person or a child restraint system. The front passenger airbag is enabled or disabled accordingly.

When installing a child restraint system on the front passenger seat, always make sure of the following:

- Ensure that the child restraint system is positioned correctly (→ page 49).
- Always observe the child restraint system manufacturer's installation instructions.
- Never place objects, e.g. cushions, under or behind the child restraint system.
- Fully retract the seat cushion length adjustment.
- The entire base of the child restraint system must always rest on the sitting surface of the front passenger seat.
- The backrest of the forward-facing child restraint system must, as far as possible, be resting on the seat backrest of the front passenger seat.
- The child restraint system must not touch the roof or be put under strain by the head restraints. Adjust the seat backrest inclination and the head restraint setting accordingly.

⚠ **WARNING** Risk of injury or death due to objects between the sitting surface and the child restraint system

Objects between the sitting surface and the child restraint system could affect the function of the automatic front passenger airbag shutoff.

This could result in the front passenger airbag not functioning as intended during an accident.

▶ Do not place any objects between the sitting surface and the child restraint system.

▶ The entire base of the child restraint system must always rest on the sitting surface of the front passenger seat.

▶ The backrest of the forward-facing child restraint system must, as far as possible, be resting on the seat backrest of the front passenger seat.

▶ Always comply with the child restraint system manufacturer's installation instructions.

A person on the front passenger seat must observe the following information:

- Fasten seat belts correctly (→ page 35).
- Sit in an almost upright seat position with their back against the seat backrest.
- Sit with their feet resting on the floor, if possible.

The front passenger airbag may otherwise be disabled by mistake, for example in the following situations:

- The front passenger transfers their weight by supporting themselves on a vehicle armrest.

- The front passenger sits in such a way that their weight is raised from the sitting surface.

⚠ **WARNING** Risk of injury or death due to deactivated front passenger airbag

If the PASSENGER AIR BAG OFF indicator lamp is lit, the front passenger airbag is disabled. It will not be deployed in the event of an accident and cannot perform its intended protective function.

A person in the front passenger seat could then, for example, come into contact with the vehicle interior, especially if the person is sitting too close to the cockpit.

If the front passenger seat is occupied, always ensure that:

- The classification of the person in the front passenger seat is correct and the front passenger airbag is enabled or disabled in accordance with the person in the front passenger seat.
- The front passenger seat has been moved as far back as possible.
- The person is seated correctly.

▶ Ensure, both before and during the journey, that the status of the front passenger airbag is correct.

If the front passenger seat is occupied, the classification of the person or child restraint system on the front passenger seat takes place after the front passenger airbag shutoff self-test. The PASSENGER AIR BAG indicator lamps display the status of the front passenger airbag.

Always observe the notes on the function of the PASSENGER AIR BAG indicator lamps (→ page 45).

Function of the PASSENGER AIR BAG indicator lamps

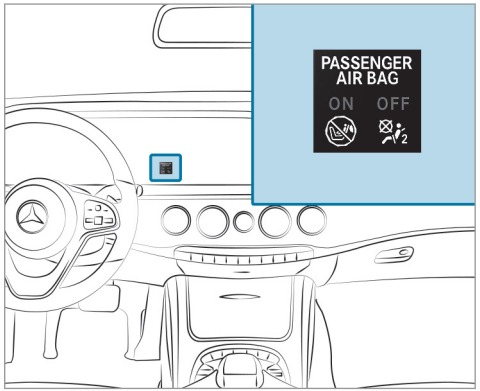

Self-test of automatic front passenger front airbag shutoff

When the ignition is switched on, a self-test is performed during which the two PASSENGER AIR BAG ON and OFF indicator lamps light up simultaneously.

The status of the front passenger front airbag is displayed after the self-test:

- PASSENGER AIR BAG ON lights up for 60 seconds, subsequently both indicator lamps are off (PASSENGER AIR BAG ON and OFF): the front passenger front airbag is able to deploy in the event of an accident.
- PASSENGER AIR BAG OFF lights up continuously: the front passenger front airbag is disabled. It will then not be deployed in the event of an accident.

If the PASSENGER AIR BAG ON indicator lamp is off, only the PASSENGER AIR BAG OFF indicator lamp shows the status of the front passenger front airbag. The PASSENGER AIR BAG OFF indicator lamp may be lit continuously or be off.

If the PASSENGER AIR BAG OFF indicator lamp and the restraint system warning lamp light up simultaneously, the front passenger seat may not be used. Also in this case, do not install a child restraint system on the front passenger seat. Have automatic front passenger front airbag shutoff checked and repaired immediately at a qualified specialist workshop.

Status display
If the front passenger seat is occupied, ensure, both before and during the journey, that the status of the front passenger front airbag is correct for the current situation.

After installing a rearward-facing child restraint system on the front passenger seat: PASSENGER AIR BAG OFF must be lit continuously.

⚠ **WARNING** Risk of injury or death from using a rearward-facing child restraint system when the front passenger front airbag is enabled

If you secure a child in a rearward-facing child restraint system on the front passenger seat and the PASSENGER AIR BAG OFF indicator lamp is off, the front passenger airbag can deploy in the event of an accident.

The child could be struck by the airbag.

Always ensure that the front passenger airbag is deactivated. The PASSENGER AIR BAG OFF indicator lamp must be lit.

NEVER use a rearward-facing child restraint system on a seat protected by an ENABLED FRONT AIRBAG in front of it, DEATH or SERIOUS INJURY to the CHILD can occur.

When installing a child restraint system on the front passenger seat, observe the vehicle-specific information (→ page 60).

Depending on the child restraint system and the stature of the child, the PASSENGER AIR BAG OFF indicator lamp may be off. In this case, do not install the rearward-facing child restraint system on the front passenger seat.

Instead, install the rearward-facing child restraint system on a suitable rear seat.

After installing a forward-facing child restraint system on the front passenger seat: depending on the child restraint system and the stature of the child, PASSENGER AIR BAG OFF may be lit continuously or be off. Always observe the following information.

⚠ **WARNING** Risk of injury or death due to incorrect positioning of the forward-facing child restraint system

If you secure a child in a forward-facing child restraint system on the front passenger seat and you position the front passenger seat too close to the cockpit, in the event of an accident, the child could:

- Come into contact with the vehicle interior if the PASSENGER AIR BAG OFF indicator lamp is lit, for example.
- Be struck by the air bag if the PASSENGER AIR BAG OFF indicator lamp is off.

▶ Always move the front passenger seat as far back as possible and fully retract the seat cushion length adjustment. Always make sure that the shoulder belt strap is correctly routed from the seat belt outlet on the vehicle to the shoulder belt guide on the child restraint system. The shoulder belt strap must be routed forwards and downwards from the vehicle belt outlet. If necessary, adjust the seat belt outlet and the front passenger seat accordingly.

▶ Always observe the child restraint system manufacturer's installation instructions.

When installing a child restraint system on the front passenger seat, observe the vehicle-specific information (→ page 60).

If a person is sitting on the front passenger seat: PASSENGER AIR BAG OFF may be lit continuously or be off, depending on the person's stature.

A person on the front passenger seat must always observe the following information:

- If the front passenger seat is occupied by an adult or a person with a stature corresponding to that of an adult, the PASSENGER AIR BAG OFF indicator lamp must be off. This indicates that the front passenger front airbag is enabled.

  If the PASSENGER AIR BAG OFF indicator lamp is lit continuously, an adult or person with a build corresponding to that of an adult should not use the front passenger seat. Instead, they should use a rear seat.
- If the front passenger seat is occupied by a person of smaller stature (e.g. a teenager or small adult), the PASSENGER AIR BAG OFF indicator lamp either lights up continuously or remains off, depending on the result of the classification.
  - If the PASSENGER AIRBAG OFF indicator lamp is off: move the front passenger seat as far back as possible or the person of smaller stature should use a rear seat.
  - If the PASSENGER AIRBAG OFF indicator lamp is lit continuously: the person of smaller stature should not use the front passenger seat.

⚠ **WARNING** Risk of injury or death when the PASSENGER AIR BAG OFF indicator lamp is lit

If the PASSENGER AIR BAG OFF indicator lamp remains lit after the system self-test, the front passenger air bag is deactivated. It will not be deployed in the event of an acci-

dent. In this case, the front passenger air bag cannot perform its intended protective function, e.g. when a person is seated in the front passenger seat.

That person could, for example, come into contact with the vehicle interior, especially if the person is sitting too close to the cockpit.

If the front passenger seat is occupied, always ensure that:

- The classification of the person in the front passenger seat is correct and the front passenger air bag is enabled or deactivated in accordance with the person in the front passenger seat.
- The person is seated properly with a correctly fastened seat belt.
- The front passenger seat has been moved as far back as possible.

Be sure to also observe the following further related subjects:

- Child restraint system on the front passenger seat (→ page 60).

PRE-SAFE® system

PRE-SAFE® (anticipatory occupant protection)

PRE-SAFE® is able to detect certain critical driving situations and implement pre-emptive measures to protect the vehicle occupants.

PRE-SAFE® can implement the following measures independently of each other:

- Tightening the seat belts on the driver's seat and front passenger seat.
- Closing the side windows.
- **Vehicles with sliding sunroof:** Close the sliding sunroof.
- **Vehicles with memory function:** Move the front passenger seat to a more favorable seat position.
- **Vehicles with memory function in the rear passenger compartment:** move the outer rear seats to a more favorable seat position.
- **Vehicles with multicontour seat:** Increase the air pressure in the seat side bolsters of the seat backrest.
- **Vehicles with rear seat belt buckle extenders:** tighten seat belts on the outer rear seats.
- PRE-SAFE® Sound: provided that the multimedia system is switched on, generates a brief noise signal to stimulate the innate protective mechanism of a person's hearing.

! **NOTE** Damage caused by objects in the footwell or behind the seat

The automatic adjustment of the seat position may result in damage to the seat and/or the object.

▶ Stow objects in a suitable place.

Reversing the PRE-SAFE® system measures

If an accident did not occur, the pre-emptive measures that were taken are reversed.

You will need to perform certain settings yourself.

▶ If the seat belt pre-tensioning is not reduced, move the seat backrest back slightly. The locking mechanism releases.

Function of PRE-SAFE® PLUS (anticipatory occupant protection plus)

PRE-SAFE® PLUS can detect certain impacts, particularly an imminent rear impact, and take pre-emptive measures to protect the vehicle occupants. These measures cannot necessarily prevent an imminent impact.

PRE-SAFE® PLUS can implement the following measures independently of each other:

- Tightening the seat belts on the driver's seat and front passenger seat.
- **Vehicles with electric rear seats:** tighten the seat belts on the outer rear seats.
- Increasing brake pressure when the vehicle is stationary. This brake application is canceled automatically when the vehicle pulls away.

If an accident did not occur, the pre-emptive measures that were taken are reversed.

System limits

The system will not initiate any action in the following situations:

- when backing up

The system will not initiate any braking application in the following situations:

- whilst driving

  or
- when entering or exiting a parking space while using Active Parking Assist

Safely transporting children in the vehicle

Always observe when children are traveling in the vehicle

ⓘ Also strictly observe the safety notes for the specific situation. In this way you can recognize potential risks and avoid dangers if children are traveling in the vehicle (→ page 50).

Be diligent

Bear in mind that neglecting to secure a child in the child restraint system may have serious consequences. Always be diligent in securing a child carefully before every journey.

To improve protection for children younger than 12 years old or under 5 ft (1.50 m) in height, Mercedes-Benz recommends you observe the following information:

- Always secure the child in a child restraint system suitable for this Mercedes-Benz vehicle.
- The child restraint system must be appropriate to the age, weight and size of the child.
- The vehicle seat must be suitable for installing a child restraint system.

Accident statistics show that children secured on the rear seats are generally safer than children secured on the front seats. For this reason, Mercedes-Benz strongly advises that you install a child restraint system on a rear seat.

Generic term "child restraint system"

The generic term child restraint system is used in this Operator's Manual. A child restraint system is, for example:

- A baby car seat
- A rearward-facing child seat
- A forward-facing child seat
- A child booster seat with a backrest and seat belt guide

  Mercedes-Benz recommends using a child booster seat with a backrest.

The child restraint system must be appropriate to the age, weight and size of the child.

Observing laws and legal requirements

Always observe the legal requirements when using a child restraint system in the vehicle.

Observing standards for child restraint systems

All child restraint systems must meet the following standards:

- U.S. Federal Motor Vehicle Safety Standards 213 and 225
- Canadian Motor Vehicle Safety Standards 213 and 210.2

Confirmation that the child restraint system complies with the standards can be found on an instruction label on the child restraint system. This confirmation can also be found in the installation instructions that are included with the child restraint system.

Detecting risks, avoiding danger

Securing systems for child restraint systems in the vehicle

Only use the following securing systems for child restraint systems:

- The LATCH-type (ISOFIX) mounting brackets
- The vehicle's seat belt system
- The Top Tether anchorages

Installing a LATCH-type (ISOFIX) child restraint system is preferred.

Simply attaching to the securing rings on the vehicle can reduce the risk of installing the child restraint system incorrectly.

When securing a child with the integrated seat belt of the LATCH-type (ISOFIX) child restraint system, always comply with the permissible gross weight for the child and child restraint system (→ page 55).

A booster seat may be necessary to achieve proper seat belt positioning for children over 40 lbs (18 kg) in weight or until they reach a height where a three-point seat belt can be fitted properly without a booster seat.

Mercedes-Benz recommends a suitable child booster seat with a backrest and seat belt guide.

Advantage of a rearward-facing child restraint system

It is preferable to transport a baby or a small child in a suitable rearward-facing child restraint system. In this case, the child sits in the oppo-

site direction to the direction of travel and faces backwards.

Babies and small children have comparatively weak neck muscles in relation to the size and weight of their head. The risk of injury to the cervical spine during an accident can be reduced in a rearward-facing child restraint system.

Always secure a child restraint system correctly

⚠ **WARNING** Risk of injury or death caused by incorrect installation of the child restraint system

If the child restraint system is incorrectly installed on a suitable seating position, it cannot perform its intended protective function.

The child cannot be restrained in the event of an accident, heavy braking or a sudden change of direction.

▶ Always comply with the manufacturer's installation instructions for the child restraint system and its correct use.

▶ Make sure that the entire base of the child restraint system always rests on the sitting surface of the seat.

▶ Never place objects under or behind the child restraint system, e.g. cushions.

▶ Always use child restraint systems with the original cover designed for them.

▶ Always replace damaged covers with genuine covers.

⚠ **WARNING** Risk of injury or death from unsecured child restraint systems in the vehicle

If the child restraint system is not correctly installed or secured, it could release in the event of an accident, sudden braking or a sudden change in direction.

The child restraint system could be flung around and hit vehicle occupants.

▶ Always install child restraint systems correctly, even when not in use.

▶ Always comply with the child restraint system manufacturer's installation instructions.

- Always observe the child restraint system manufacturer's installation and operating instructions as well as the vehicle-specific information:
  - Install the LATCH-type (ISOFIX) child restraint system on the rear seat (→ page 55).
  - Secure the child restraint system with the seat belt on the rear seat (→ page 59).
  - Secure the child restraint system with the seat belt on the front passenger seat (→ page 60). Observe the specific instructions for the rearward-facing and forward-facing child restraint systems (→ page 60).

    If the front passenger seat is occupied, ensure, both before and during the journey, that the status of the front passenger airbag is correct for the current situation (→ page 45).

- Observe the warning labels in the vehicle interior and on the child restraint system.
- Also secure Top Tether if present.

Notes for vehicles with a reclining rear seat

When installing a child restraint system, move the reclining rear seat backrest to an almost upright position. The reclining rear seat backrest must be in contact with the child restraint system. Observe the notes on the cushionbag (→ page 40).

If you install a child restraint system on the reclining rear seat, be sure to observe the child restraint system manufacturer's installation instructions.

Do not modify the child restraint system

⚠ **WARNING** Risk of injury due to modifications to the child restraint system

The child restraint system may no longer function as it is supposed to if you make modifications or attach objects to it, e.g. toys or unsuitable accessories. This poses an increased risk of injury!

Never modify the child restraint system. Only attach accessories which the manufacturer of the child restraint system has authorized especially for this child restraint system.

Only use child restraint systems which are in proper working condition

⚠ **WARNING** Risk of injury or death caused by the use of damaged child restraint systems

Child restraint systems or their retaining systems that have been subjected to a load in an accident may then not be able to perform their intended protective function.

The child cannot be restrained in the event of an accident, heavy braking or a sudden change of direction.

- ▶ Always replace child restraint systems immediately that have been damaged or involved in an accident.
- ▶ Have the securing systems for the child restraint systems checked at a qualified specialist workshop before installing a child restraint system again.

Avoid direct sunlight

⚠ **WARNING** Risk of burns when the child seat is exposed to direct sunlight

If the child restraint system is exposed to direct sunlight or heat, parts could heat up.

Children could suffer burns from these parts, particularly on metallic parts of the child restraint system.

- ▶ Always make sure that the child restraint system is not exposed to direct sunlight.
- ▶ Protect it with a blanket, for example.
- ▶ If the child restraint system has been exposed to direct sunlight, allow it to cool before securing a child into it.
- ▶ Never leave children unattended in the vehicle.

Observe when stopping or parking

⚠ **WARNING** Risk of accident and injury due to children left unattended in the vehicle

If children are left unattended in the vehicle, they could:

- Open doors, thereby endangering other persons or road users.
- Get out and be struck by oncoming traffic.
- Operate vehicle equipment and become trapped, for example.

In addition, the children could also set the vehicle in motion, for example by:

- Releasing the parking brake.
- Changing the transmission position.
- Starting the vehicle.

▶ Never leave children unattended in the vehicle.

▶ When leaving the vehicle, always take the key with you and lock the vehicle.

▶ Keep the vehicle key out of reach of children.

⚠ **WARNING** Risk of fatal injury due to exposure to extreme heat or cold in the vehicle

If people – particularly children – are exposed to extreme temperatures over an extended period of time, there is a risk of serious or even fatal injury.

▶ Never leave anyone – particularly children – unattended in the vehicle.

▶ Never leave animals in the vehicle unattended.

Overview of suitable seats in the vehicle for installing a child restraint system

Securing systems for child restraint systems

Vehicle seat		
Left/right rear seat	Preferred securing system: LATCH-type (ISOFIX) child seat securing system Also secure Top Tether if present (→ page 57)	Alternative securing system: • Vehicle seat belt
Front passenger seat	Securing system: • Vehicle seat belt	Be sure to observe: • If the front passenger seat is occupied, ensure, both before and during the journey, that the status of the front passenger airbag is correct for the current situation (→ page 45). • Notes on automatic front passenger airbag shut-off (→ page 44).
Center rear seat	Securing system: • Vehicle seat belt Also secure Top Tether if present (→ page 57)	

Activating/deactivating the seat belt's special seatbelt retractor

⚠ **WARNING** Risk of injury or death if a seat belt is unfastened while the vehicle is in motion

If the seat belt is released while the vehicle is in motion, the child restraint system is no longer correctly secured. The child seat safety feature is deactivated and the seat belt is drawn in a bit by the inertia reel.

It is therefore not possible to engage the seat belt again.

▶ Pull over and stop the vehicle safely as soon as possible, paying attention to road and traffic conditions.

▶ Activate the child seat safety feature again and correctly secure the child restraint system.

When enabled, the special seatbelt retractor ensures that the seat belts of the front passenger seat and rear seats do not slacken once the child restraint system is secured.

The seat belts on the following seats are equipped with a special seatbelt retractor:

- Front passenger seat
- Rear seats

▶ **To install a child restraint system:** when installing a child restraint system, always observe the manufacturer's installation and operating instructions as well as the information in this Operator's Manual.

▶ Pull the seat belt smoothly from the seat belt outlet.

▶ Engage the seat belt tongue in the seat belt buckle.

▶ **To activate the special seatbelt retractor:** pull the seat belt out fully and let the inertia reel retract it again.
When the special seatbelt retractor is activated, you should hear a ratcheting sound.

▶ Push the child restraint system down until the seat belt sits tightly.

▶ **To deactivate the special seatbelt retractor:** press the release button of the seat belt buckle.

▶ Hold the seat belt tongue and guide back to the seat belt outlet.

Installing the LATCH-type (ISOFIX) child restraint system on the rear seat

Installing a LATCH-type (ISOFIX) child restraint system on the rear seat

⚠ **WARNING** Risk of injury or death if the permissible gross mass of the child and child restraint system is exceeded

For LATCH-type (ISOFIX) child restraint systems in which the child is secured using the integrated seat belt in the child restraint system, the permissible gross mass of the child and child restraint system is 73 lb (33 kg).

If the child and the child restraint system together weigh more than 73 lb (33 kg), the LATCH-type (ISOFIX) child restraint system with integrated seat belt does not offer sufficient protection. An excessive load may be placed on the LATCH-type (ISOFIX) child seat attachments and the child may not be

restrained in the event of an accident, for example.

▶ If the child and the child restraint system together weigh more than 73 lb (33 kg), use only a LATCH-type (ISOFIX) child restraint system that secures the child with the vehicle seat belt.

▶ Also secure the child restraint system with the Top Tether belt, if available.

Always comply with the information about the mass of the child restraint system:

- In the manufacturer's installation and operating instructions for the child restraint system used
- On a label on the child restraint system, if present

Regularly check that the permissible gross mass of the child and child restraint system is still complied with.

When installing a child restraint system, observe the following:

☑ Always observe the correct use of the seats and consider their suitability for attaching a child restraint system.

☑ Always comply with the manufacturer's installation and operating instructions for the child restraint system used.

☑ Make sure that the child's feet do not touch the front seat. If necessary, move the front seat slightly forwards.

When installing a LATCH-type (ISOFIX) child restraint system, also observe the following:

☑ **When using a Group 0/0+ baby car seat and a Group I rearward-facing child restraint system on a rear seat:** adjust the front seat so that the seat does not touch the child restraint system.

☑ **When using a Group I forward-facing child restraint system:** remove the head restraint from the respective seat, if possible. In addition, the backrest of the child restraint system must, as far as possible, lie flat against the backrest of the vehicle seat.

After the child restraint system has been removed, replace the head restraints immediately and adjust them correctly.

☑ For certain child restraint systems in weight group II or III, there may be restrictions on the maximum size setting, e.g. due to possible contact with the roof.

☑ The child restraint system must not be put under strain between the roof and the seat cushion and/or be installed facing the wrong direction. Where possible, adjust the seat cushion inclination accordingly.

☑ The child restraint system must not be put under strain by the head restraint. Adjust the head restraints accordingly.

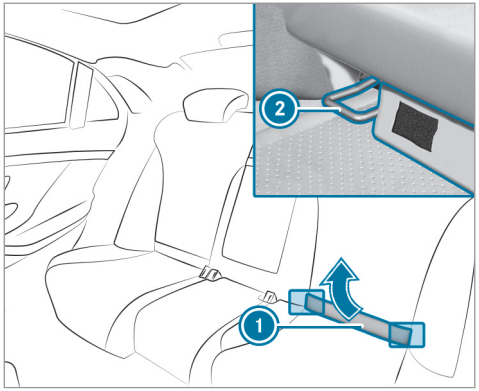

Before every journey, make sure that the LATCH-type (ISOFIX) child restraint system is engaged correctly in both mounting brackets in the vehicle.

NOTE Be careful not to damage the seat belt for the center seat when installing the child restraint system

▶ Make sure that the seat belt is not trapped.

▶ **Vehicles with reclining rear seats:** Tilt the reclining rear seat backrest back slightly before the LATCH-type (ISOFIX) child restraint system is installed.

▶ Remove upholstered lining ①.

▶ **Vehicles without reclining rear seats:** Fold upholstered lining ① upwards.

▶ Turn the support on the rear side of upholstered lining ① by 90°.
Upholstered lining ① will remain folded upwards.

▶ Attach the LATCH-type (ISOFIX) child restraint system to both mounting brackets ② in the vehicle.

▶ **Vehicles with reclining rear seats:** Return the reclining rear seat backrest to an upright position.
The reclining rear seat backrest must be in contact with the child restraint system.

Securing a Top Tether

WARNING Risk of injury or death when adjusting the seat after installing a child restraint system

Vehicles with electrically adjustable rear seats:

If you adjust the seat after installing a child restraint system, the following may occur:

- the seat belt may either sit too loose or too tight
- the child restraint system can become loose, incorrectly positioned or damaged

As a result, the child restraint system may not be able to provide the intended level of protection.

▶ Never adjust the seat after installing the child restraint system.

If the child restraint system is equipped with a Top Tether belt:

The risk of injury can be reduced by a Top Tether. The Top Tether belt facilitates an additional connection between the child restraint system attached with LATCH-type (ISOFIX) and the vehicle.

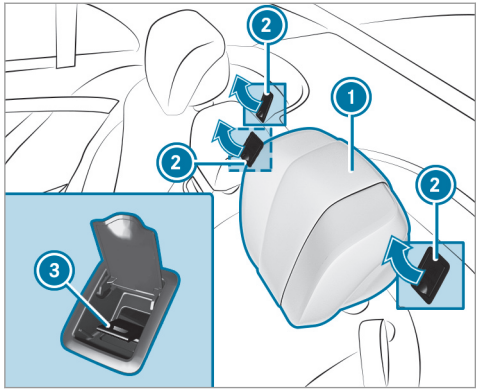

▶ If necessary, slide the head restraint ① upwards (→ page 111).

▶ Fold up cover ② of Top Tether anchorage ③.

▶ Install the LATCH-type (ISOFIX) child restraint system with Top Tether. Comply with the child restraint system manufacturer's installation instructions when doing so.

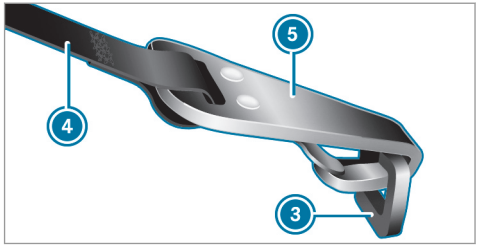

▶ Guide Top Tether belt ④ under head restraint ① between the two head restraint bars.

▶ Hook Top Tether hook ⑤ of Top Tether belt ④ into Top Tether anchorage ③ without twisting.

▶ Tension Top Tether belt ④. Comply with the child restraint system manufacturer's installation instructions when doing so.

▶ Fold down cover ② of Top Tether anchorage ③.

▶ If necessary, slide head restraint ① downwards (→ page 111). Make sure that you do

not interfere with the correct routing of Top Tether belt ④.

Securing the child restraint system with the seat belt

Securing the child restraint system with the seat belt on the rear seat

When installing a belt-secured child restraint system, observe the following:

- ☑ Always comply with the manufacturer's installation and operating instructions for the child restraint system used.
- ☑ **When using a category 0/0+ baby car seat and a category I rearward-facing child restraint system on a rear seat:** adjust the front seat so that the seat does not touch the child restraint system.
- ☑ **When using a category I forward-facing child restraint system:** remove the head restraint from the respective seat, if possible.

After the child restraint system has been removed, replace the head restraints immediately and adjust them correctly.

- ☑ The backrest of the forward-facing child restraint system must, as far as possible, be resting on the seat backrest of the rear seat.
- ☑ For certain child restraint systems in weight category II or III, there may be restrictions on the maximum size setting, e.g. due to possible contact with the roof.
- ☑ The child restraint system must not be put under strain between the roof and the seat cushion and/or be installed facing the wrong direction. Where possible, adjust the seat cushion inclination accordingly.
- ☑ The child restraint system must not be put under strain by the head restraint. Adjust the head restraints accordingly.
- ☑ Make sure that the child's feet do not touch the front seat. If necessary, move the front seat slightly forwards.

The seat belts on the following seats are equipped with a child seat safety feature:

- Front passenger seat
- Rear seats

Vehicles with seat belt buckle extenders: when securing a child in a child restraint system on a rear seat, observe the following notes:

- Make sure that the seat belt is fastened on the child restraint system according to the manufacturer's installation instructions for the child restraint system.
- For child restraint systems with a belt clamp: engage the seat belt tongue into the seat belt buckle before you tighten the seat belt using the belt clamp.

When enabled, the child seat safety feature ensures that the seat belts of the front passenger seat and rear seats do not slacken once the child restraint system is secured (→ page 55).

- Install the child restraint system.
  The entire base of the child restraint system must always rest on the sitting surface of the rear seat.
- Always make sure that the shoulder belt strap is correctly routed from the seat belt outlet of the vehicle to the shoulder belt guide on the child restraint system.
  The shoulder belt strap must be routed forwards and downwards from the seat belt outlet.

Notes on rearward-facing and forward-facing child restraint systems on the front passenger seat

⚠ **WARNING** Risk of injury or death from using a rearward-facing child restraint system when the front passenger front airbag is enabled

If you secure a child in a rearward-facing child restraint system on the front passenger seat and the PASSENGER AIR BAG OFF indicator lamp is off, the front passenger airbag can deploy in the event of an accident.

The child could be struck by the airbag.

Always ensure that the front passenger airbag is deactivated. The PASSENGER AIR BAG OFF indicator lamp must be lit.

NEVER use a rearward-facing child restraint system on a seat protected by an ENABLED FRONT AIRBAG in front of it, DEATH or SERIOUS INJURY to the CHILD can occur.

Observe the specific instructions for the rearward-facing and forward-facing child restraint systems (→ page 60).

Always observe the status of the front passenger airbag on the PASSENGER AIR BAG OFF indicator lamp:

- When using a rearward-facing child restraint system on the front passenger seat, the front passenger airbag must always be disabled. This is only the case if the PASSENGER AIR BAG OFF indicator lamp is lit continuously (→ page 45).
- If the PASSENGER AIR BAG OFF indicator lamp is off, the front passenger airbag is enabled. The front passenger airbag may deploy during an accident.

Securing the child restraint system with the seat belt on the front passenger seat

When installing a belt-secured child restraint system on the front passenger seat, always observe the following:

☑ Observe the child restraint system manufacturer's installation and operating instructions.

☑ When using a forward-facing child restraint system in category I: remove the head restraint from the respective seat, if possible.

After the child restraint system has been removed, replace the head restraints immediately and adjust them correctly.

☑ The backrest of the forward-facing child restraint system must, as far as possible, be resting on the seat backrest of the front passenger seat.

☑ For certain child restraint systems in weight category II or III, there may be restrictions

on the maximum size setting, e.g. due to possible contact with the roof.

☑ The child restraint system must not be tensioned between the roof and the seat cushion and/or be installed facing the wrong direction.

☑ The child restraint system must not be put under strain by the head restraints. Adjust the head restraints accordingly.

☑ Never place objects under or behind the child restraint system, e.g. cushions.

The seat belt on the front passenger side is equipped with a special seat belt retractor.

When enabled, the special seat belt retractor function ensures that the seat belt does not slacken once the child restraint system is secured (→ page 55).

▶ Set the front passenger seat as far back as possible and move the seat into the highest position if possible.

▶ Fully retract the seat cushion length adjustment.

▶ Adjust the seat cushion inclination so that the front edge of the seat cushion is in the highest position and the rear edge of the seat cushion is in the lowest position.

▶ Set the seat backrest to the most vertical position possible.

▶ Install the child restraint system.
The entire base of the child restraint system must always rest on the sitting surface of the front passenger seat.

▶ Always make sure that the shoulder belt strap is correctly routed from the seat belt outlet of the vehicle to the shoulder belt guide on the child restraint system.
The shoulder belt strap must be routed forwards and downwards from the seat belt outlet.

▶ If necessary, adjust the seat belt outlet and the front passenger seat accordingly.

Child safety locks

Activating/deactivating the child safety lock for the rear doors

⚠ **WARNING** Risk of accident and injury due to children left unattended in the vehicle

If children are left unattended in the vehicle, they could:

- Open doors, thereby endangering other persons or road users.
- Get out and be struck by oncoming traffic.
- Operate vehicle equipment and become trapped, for example.

In addition, the children could also set the vehicle in motion, for example by:

- Releasing the parking brake.
- Changing the transmission position.
- Starting the vehicle.

- ▶ Never leave children unattended in the vehicle.
- ▶ When leaving the vehicle, always take the key with you and lock the vehicle.
- ▶ Keep the vehicle key out of reach of children.

⚠ **WARNING** Risk of fatal injury due to exposure to extreme heat or cold in the vehicle

If people – particularly children – are exposed to extreme temperatures over an extended period of time, there is a risk of serious or even fatal injury.

- ▶ Never leave anyone – particularly children – unattended in the vehicle.
- ▶ Never leave animals in the vehicle unattended.

⚠ **WARNING** Risk of accident and injury due to children left unattended in the vehicle

If children are traveling in the vehicle, they could, in particular:

- Open doors, thereby endangering other persons or road users
- Get out and be struck by oncoming traffic
- Operate vehicle equipment and become trapped, for example

- ▶ Always activate the child safety locks installed if children are traveling in the vehicle.
- ▶ Never leave children unattended in the vehicle.
- ▶ When leaving the vehicle, always take the SmartKey with you and lock the vehicle.

There are child safety locks for the rear doors and the rear side windows.

The child safety lock on the rear doors secures each door separately. The doors can no longer be opened from the inside.

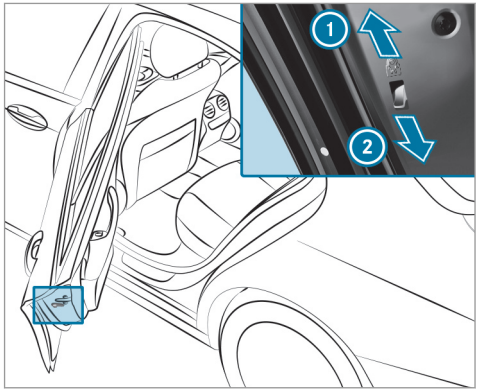

- ▶ Press the lever in direction 1 (activate) or 2 (deactivate).
- ▶ Make sure that the child safety locks are working properly.

Activating/deactivating the child safety lock for the rear side windows

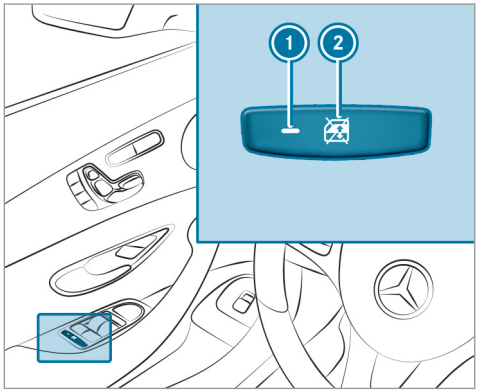

▶ **To activate/deactivate:** press button ②.

Opening/closing the side window in the rear passenger compartment is possible:

- With indicator lamp ① lit: via the switch on the driver's door.
- With indicator lamp ① off: via the switch on the corresponding rear door or driver's door.

When the child safety lock is activated, the controls in the rear compartment are disabled for:

- The rear side windows
- The adjustment of the front passenger seat from the rear compartment
- The roller sunblinds:
  - of the rear side windows
  - of the rear window
  - in the roof

Notes on pets in the vehicle

⚠ **WARNING** Risk of accident and injury due to animals left unsecured or unattended in the vehicle

If you leave animals in the vehicle unattended or unsecured, they could possibly press down buttons or switches.

Thereby an animal may:

- activate vehicle equipment and become trapped, for example
- switch systems on or off and endanger other road users

Unsecured animals may be thrown around in the vehicle in the event of an accident or sudden steering and braking maneuver and injure vehicle occupants in the process.

▶ Never leave animals in the vehicle unattended.

▶ Always correctly secure animals while driving, for example using a suitable animal carrier.

SmartKey

Overview of SmartKey functions

WARNING Risk of accident and injury due to children left unattended in the vehicle

If children are left unattended in the vehicle, they could:

- Open doors, thereby endangering other persons or road users.
- Get out and be struck by oncoming traffic.
- Operate vehicle equipment and become trapped, for example.

In addition, the children could also set the vehicle in motion, for example by:

- Releasing the parking brake.
- Changing the transmission position.
- Starting the vehicle.

▶ Never leave children unattended in the vehicle.

▶ When leaving the vehicle, always take the key with you and lock the vehicle.

▶ Keep the vehicle key out of reach of children.

NOTE Damage to the key caused by magnetic fields

▶ Keep the key away from strong magnetic fields.

ⓘ The SmartKey may vary from the one shown in the diagram, depending on the vehicle equipment.

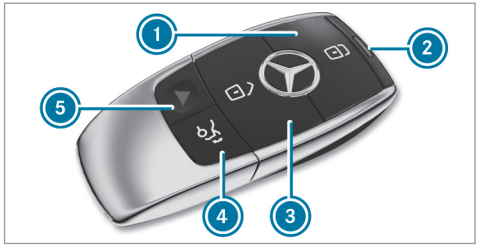

1. Locks
2. Indicator lamp
3. Unlocks
4. Opens/closes the trunk lid
5. Panic alarm

ⓘ If check lamp 2 does not light up after pressing the [🔒] or [🔓] button, the battery is weak or possibly discharged. Replace the battery as soon as possible.

Replace the SmartKey battery (→ page 66).

The SmartKey locks and unlocks the following components:

- Doors

- Fuel filler flap
- Trunk lid

If the vehicle is not opened within approximately 40 seconds after unlocking, it locks again. Anti-theft protection is activated again.

Do not keep the SmartKey together with electronic devices or metal objects. This can affect the SmartKey's functionality.

Do not keep the SmartKey in the temperature-controlled cup holder. Otherwise, the SmartKey will not be reliably detected.

Activating/deactivating the acoustic locking verification signal

Multimedia system:

→ Vehicle ▸▸ Vehicle Settings ▸▸ Acoustic Lock

▶ Activate ☑ or deactivate ☐ the function.

Activating/deactivating the panic alarm

Requirements:

- The ignition is switched off.

ⓘ The panic alarm function is only available in certain countries.

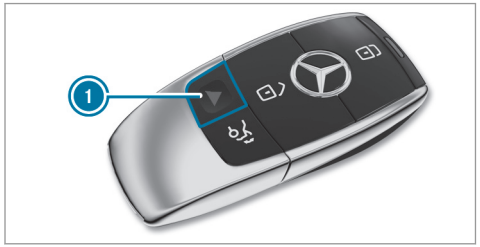

▶ **To activate:** press button ① for approximately one second.
A visual and audible alarm is triggered.

▶ **To deactivate:** briefly press button ① again.

or

▶ Press the start/stop button on the cockpit (the SmartKey is inside the vehicle).

Changing the unlocking settings

Possible unlocking functions of the SmartKey:

- Central unlocking
- Unlocking the driver's door and fuel filler flap

▶ **To switch between settings:** press the [🔓] and [🔒] buttons simultaneously for approximately six seconds until the indicator lamp flashes twice.

Options if the unlocking function for the driver's door and fuel filler flap has been selected:

- **To unlock the vehicle centrally:** press the [🔓] button twice.
- **Vehicles with KEYLESS-GO:** if you touch the inner surface of the door handle on the driver's door, only the driver's door and fuel filler flap are unlocked.

Deactivating the SmartKey functions

If you do not use the vehicle or a SmartKey for an extended period of time, you can reduce the energy consumption of the respective SmartKey. To do so, deactivate the SmartKey functions.

- **To deactivate:** press the [🔒] button on the SmartKey twice in quick succession.
  The SmartKey indicator lamp flashes twice briefly and lights up once.
- **To activate:** press any button on the SmartKey.

ⓘ When the vehicle is started with the SmartKey in the marked space of the center console, the SmartKey functions are automatically activated (→ page 173).

Removing/inserting the emergency key

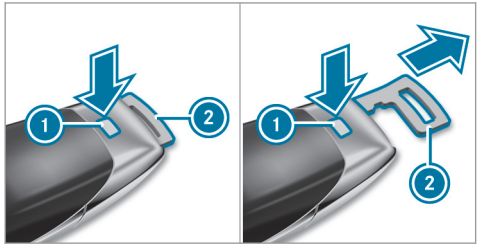

- **To remove:** press release knob ①.
  Emergency key ② is pushed out slightly.
- Pull out emergency key ② until it engages in the intermediate position.
- Press release knob ① again and fully remove emergency key ②.
- **To insert:** press release knob ①.
- Insert emergency key ② to the intermediate position or fully until it engages.

ⓘ You can use the intermediate position of emergency key ② to attach the SmartKey to a key ring.

Replacing the SmartKey battery

⚠ **DANGER** Serious damage to health caused by swallowing batteries

Batteries contain toxic and corrosive substances. Swallowing batteries may cause serious damage to health.

There is a risk of fatal injury.

- Keep batteries out of the reach of children.
- If batteries are swallowed, seek medical attention immediately.

ENVIRONMENTAL NOTE Environmental damage caused by improper disposal of batteries

Batteries contain pollutants. It is illegal to dispose of them with the household rubbish.

-
  Dispose of batteries in an environmentally responsible manner. Take discharged batteries to a qualified specialist workshop or to a collection point for used batteries.

Requirements:

- You require a CR 2032 3 V cell battery.

Mercedes-Benz recommends that you have the battery replaced at a qualified specialist workshop.

▶ Remove the emergency key (→ page 66).

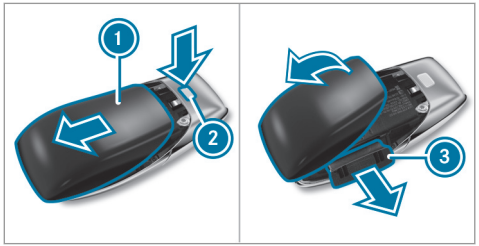

▶ Press release knob ② down fully and slide cover ① in the direction of the arrow.

▶ Fold out cover ① in the direction of the arrow and remove.

▶ Remove battery compartment ③ and take out the discharged battery.

▶ Insert the new battery into battery compartment ③. Observe the positive pole marking in the battery compartment and on the battery when doing this.

▶ Push in battery compartment ③.

▶ Re-attach cover ① and push it until it engages.

Problems with the SmartKey

Problem	Possible causes/consequences and ▶ Solutions
You can no longer lock or unlock the vehicle.	Possible causes: • The SmartKey battery is weak or discharged. • There is interference from a powerful radio signal source. • The SmartKey is faulty. ▶ Check the battery using the indicator lamp and replace if necessary (→ page 66). ▶ Use the emergency key to lock or unlock (→ page 66). ▶ Have the SmartKey checked at a qualified specialist workshop.
You have lost a SmartKey.	▶ Have the SmartKey deactivated at a qualified specialist workshop. ▶ If necessary, have the mechanical lock replaced as well.

Doors

Unlocking and opening doors from the inside

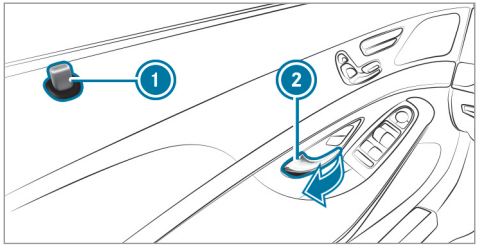

- **To unlock and open a front door:** pull door handle ②.
  Locking pin ① pops up when the door is unlocked.
- **To unlock a rear door:** pull the rear door handle.
  The locking pin pops up when the rear door is unlocked.
- **To open a rear door:** pull the rear door handle again.

Locking/unlocking the vehicle centrally from the inside

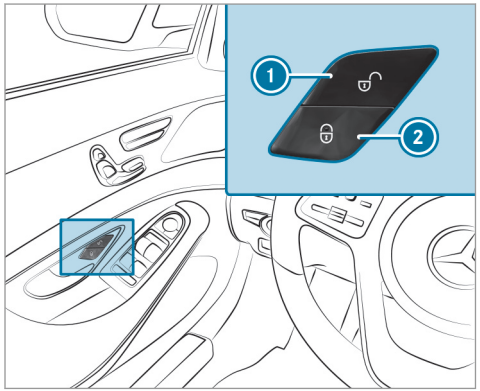

- **To unlock:** press button ①.
- **To lock:** press button ②.

This does not lock or unlock the fuel filler flap.

The vehicle is not unlocked:

- If you have locked the vehicle using the SmartKey.
- If you have locked the vehicle using KEYLESS-GO.

Locking/unlocking the vehicle with KEYLESS-GO

Requirements:

- The SmartKey is outside the vehicle.
- The distance between the SmartKey and the vehicle does not exceed 3 ft (1 m).
- The driver's door and the door at which the door handle is used are closed.

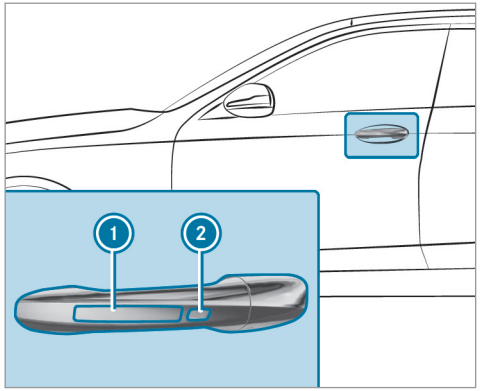

- **To unlock the vehicle:** touch the inner surface of the door handle.
- **To lock the vehicle:** touch sensor surface 1 or 2.
- **Convenience closing:** touch recessed sensor surface 2 for an extended period.

ⓘ Further information on convenience closing (→ page 81).

If you open the trunk lid from outside, the trunk lid is automatically unlocked.

Problems with KEYLESS-GO

Problem	Possible causes/consequences and ▶ Solutions
You can no longer lock or unlock the vehicle using KEYLESS-GO.	Possible causes: • The SmartKey functions have been deactivated (→ page 65). • The SmartKey battery is weak or discharged. • There is interference from a powerful radio signal source. • The SmartKey is faulty. ▶ Activate the SmartKey functions (→ page 65). ▶ Check the battery using the indicator lamp and replace if necessary (→ page 66). ▶ Use the emergency key to unlock or lock the vehicle (→ page 66). ▶ Have the vehicle and SmartKey checked at a qualified specialist workshop.

Switching the automatic locking feature on/off

The vehicle is locked automatically when the ignition is switched on and the wheels are turning faster than walking pace.

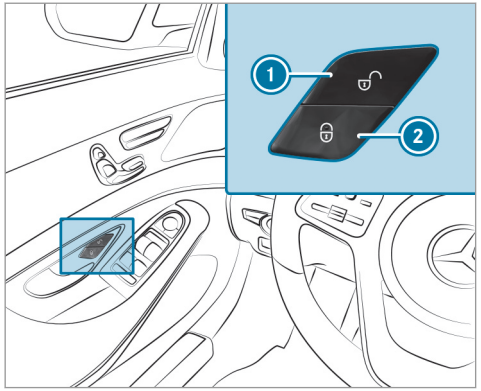

- **To deactivate:** press and hold button 1 for approximately five seconds until an acoustic signal sounds.
- **To activate:** press and hold button 2 for approximately five seconds until an acoustic signal sounds.

In the following situations, there is a danger of being locked out when the function is activated:

- The vehicle is being towed/pushed.
- The vehicle is being tested on a dynamometer.

Power closing function

If you push the door into the lock to the first detent position, the power closing function will automatically pull the door into the lock.

Locking/unlocking the driver's door with the emergency key

ⓘ If you wish to lock the vehicle entirely using the emergency key, first press the button for locking from the inside while the driver's door is open. Then proceed to lock the driver's door using the emergency key.

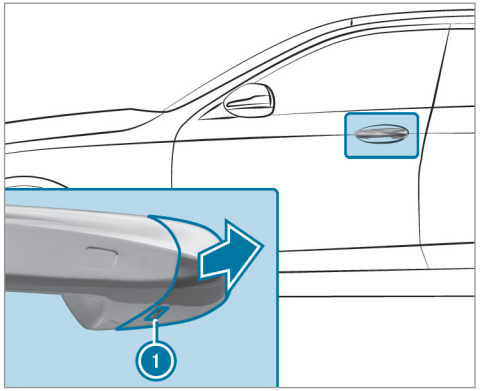

- Insert the emergency key as far as it will go into opening 1 in the cover.
- Pull and hold the door handle.
- Pull the cover on the emergency key as straight as possible away from the vehicle until it releases.
- Release the door handle.

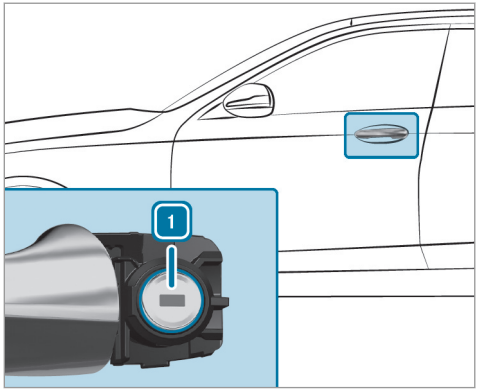

- **To unlock:** turn the emergency key counterclockwise to position 1.
- **To lock:** turn the emergency key clockwise to position 1.
- Carefully press the cover onto the lock cylinder until it engages and is seated firmly.

Trunk

Opening the trunk lid

Plug-in hybrid: observe the notes in the Supplement. Otherwise, you may fail to recognize dangers.

DANGER Risk of exhaust gas poisoning

Combustion engines emit poisonous exhaust gases such as carbon monoxide. Exhaust gases can enter the vehicle interior if the trunk lid is open when the engine is running, especially if the vehicle is in motion.

- Always switch off the engine before opening the trunk lid.
- Never drive with the trunk lid open.

NOTE Damage to the trunk lid by obstacles above the vehicle

The trunk lid swings upwards when it is opened.

- Therefore, make sure that there is sufficient clearance above the trunk lid.

You have the following options for opening the trunk lid:

- Pull the trunk lid handle.
- **Vehicles with HANDS-FREE ACCESS:** Make a kicking movement with your foot below the bumper (→ page 76).

Vehicles with trunk lid convenience closing

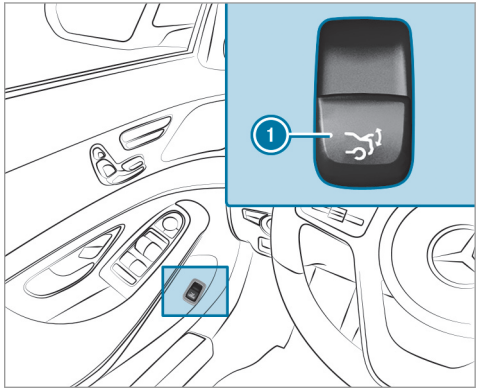

- Pull trunk lid remote operating switch ①.
- Press and hold the button on the SmartKey.
- For a trunk lid stopped in an intermediate position, pull it upwards and release it as soon as it starts to open.
  With the trunk lid opening height restriction activated, manually pull the stopped trunk lid upwards.

If an object obstructs the trunk lid during the automatic opening process, obstruction detection will stop the trunk lid. The obstruction detection function is only an aid and is not a substitute for your attentiveness.

Closing the trunk lid

WARNING Risk of injury from unsecured items in the vehicle

If objects, luggage or loads are not secured or not secured sufficiently, they could slip, tip over or be thrown around and thereby hit vehicle occupants.

There is a risk of injury, particularly in the event of sudden braking or a sudden change in direction.

- Always stow objects in such a way that they cannot be thrown around.
- Before the journey, secure objects, luggage or loads against slipping or tipping over.

Observe the notes on loading the vehicle.
You have the following options for closing the trunk lid:

- Pull the trunk lid downwards using the handle recess and push it closed.

ⓘ If you lightly push the trunk lid closed, the power closing function will automatically pull the trunk lid into the lock.

Vehicles with trunk lid convenience closing

WARNING Risk of becoming trapped during automatic closing of the trunk lid

Parts of the body could become trapped during automatic closing of the trunk lid. Moreover, people, e.g. children, may be standing in the closing area or may enter the closing area during the closing process.

- Make sure that nobody is in the vicinity of the closing area during the closing process.
- Use one of the following options to stop the closing process:
  - Press the button on the SmartKey.
  - Press or pull the remote operating switch on the driver's door.
  - Press the closing or locking button on the trunk lid.
  - Pull the trunk lid handle.

- **Vehicles with HANDS-FREE ACCESS:** it is also possible to stop the closing process by

making a kicking movement below the rear bumper.

You have the following options for closing the trunk lid:

- ▶ Pull the trunk lid downwards slightly. Release it as soon as it begins to close.
- ▶ For a trunk lid stopped in an intermediate position, push it downwards.
  The trunk lid will continue to close.

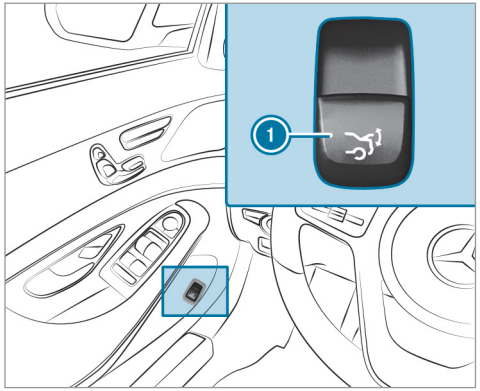

- ▶ Press the remote opening switch for trunk lid ①.

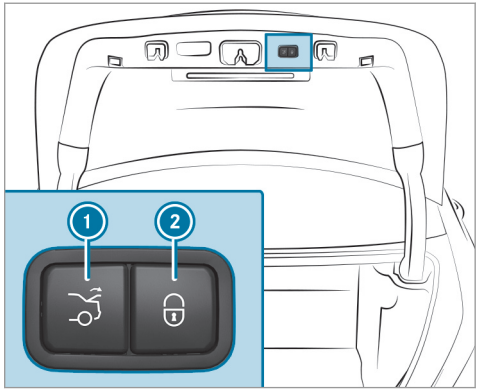

- ▶ Press closing button ① on the trunk lid.

Vehicles with KEYLESS-GO

- ▶ Press locking button ② on the trunk lid.
  If a SmartKey is detected outside the vehicle, the trunk lid will close and the vehicle will be locked.
- ▶ With the trunk lid completely opened, press and hold the button on the SmartKey

(with the SmartKey in the vicinity of the vehicle).

Vehicles with HANDS-FREE ACCESS

▶ With the trunk lid completely opened, make a kicking movement with your foot below the bumper (→ page 76).

Trunk lid automatic reversing function

If an object obstructs the trunk lid during the automatic closing process, the trunk lid will open again automatically. The automatic reversing function is only an aid and is not a substitute for your attentiveness.

▶ During the closing process, make sure that no body parts are in the closing area.

⚠ **WARNING** Risk of becoming trapped despite the reversing function

The reversing function does not react:

- to soft, light and thin objects, e.g. fingers.
- over the last ⅓ in (8 mm) of the closing path.

In these situations in particular, the reversing function cannot prevent someone being trapped.

▶ When closing, make sure that no body parts are in the closing area.

▶ If someone is trapped, use one of the following options:
- Press the [ ] button on the SmartKey.
- Press the remote operating switch on the driver's door.
- Press the closing or locking button on the trunk lid.
- Pull the trunk lid handle.

HANDS-FREE ACCESS function

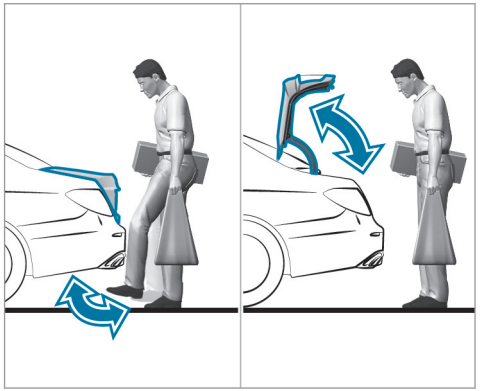

With HANDS-FREE ACCESS you can open, close or interrupt trunk lid movement by performing a kicking movement under the rear bumper.

The kicking movement triggers the opening or closing process alternately.

Observe the notes when opening (→ page 73) and closing (→ page 74) the trunk lid.

ⓘ A warning tone sounds while the trunk lid is opening or closing.

WARNING Risk of burns caused by a hot exhaust system

The vehicle exhaust system can become very hot. If you use HANDS-FREE ACCESS, you could burn yourself by touching the exhaust system.

▶ Always ensure that you only make a kicking movement within the detection range of the sensors.

NOTE Damage to the vehicle caused by unintentionally opening the trunk lid

- When using an automatic car wash
- When using a high pressure cleaner

▶ Deactivate KEYLESS-GO or make sure that the SmartKey located is at least 10 ft (3 m) away from the vehicle in such situations.

When making the kicking movement, make sure that your feet are firmly on the ground, otherwise you could lose your balance, e.g. on ice.

Observe the following notes:

- The SmartKey is behind the vehicle.
- Stand at least 12 in (30 cm) away from the vehicle while performing the kicking movement.
- Do not come into contact with the bumper while making the kicking movement.
- Do not carry out the kicking movement too slowly.
- The kicking movement must be towards the vehicle and back again.

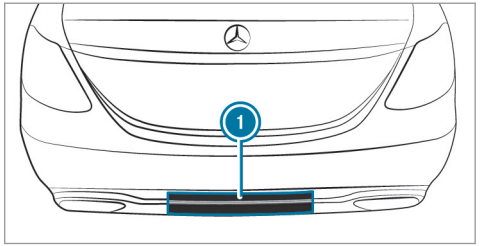

① Detection range of the sensors

If several consecutive kicking movements are not successful, wait ten seconds.

System limits

The system may be impaired or may not function in the following cases:

- The area around the sensor is dirty, e.g. due to road salt or snow.
- The kicking movement is made using a prosthetic leg.

The trunk lid could be opened or closed unintentionally, in the following situations:

- If a person's arms or legs are moving in the sensor detection range, e.g. when polishing the vehicle or picking up objects.
- If objects are moved or placed behind the vehicle, e.g. tensioning straps or luggage.
- If clamping straps, tarps or other coverings are pulled over the bumper.
- If a protective mat with a length reaching over the trunk sill down into the detection range of the sensors is used.
- If the protective mat is not secured correctly.
- When working on the trailer coupling, trailers or rear bicycle racks.

Deactivate KEYLESS-GO (→ page 65) or do not carry the SmartKey about your person in such situations.

Switching separate trunk locking on/off

If you centrally unlock the vehicle while separate locking is activated, the trunk will remain locked.

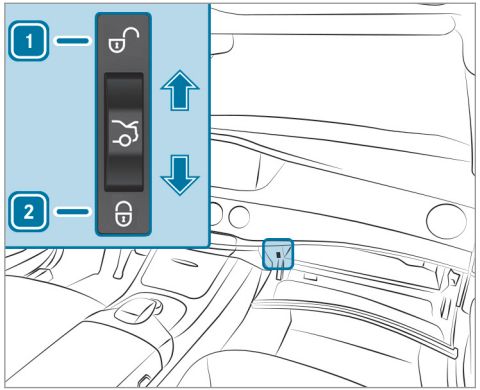

▶ **To switch on:** slide the switch to position 2.

▶ **To switch off:** slide the switch to position 1.

ⓘ If an accident has been detected, the trunk will unlock even if separate locking is switched on.

Unlocking the trunk from inside with the emergency release

Requirements:

- The 12 V vehicle battery is connected and charged.

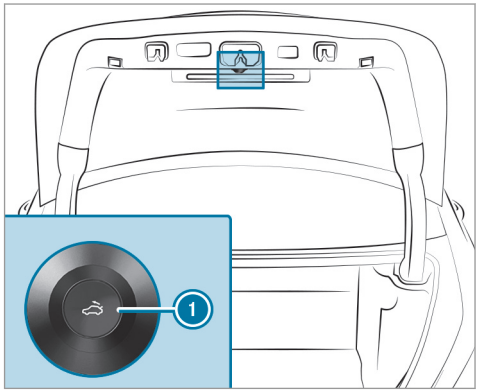

▶ Press emergency release button 1 briefly. The trunk lid will unlock and open.

Unlocking the trunk lid using the emergency key

▶ Take the emergency key out of the SmartKey (→ page 66).

▶ Insert the emergency key into the trunk lock as far as it will go.

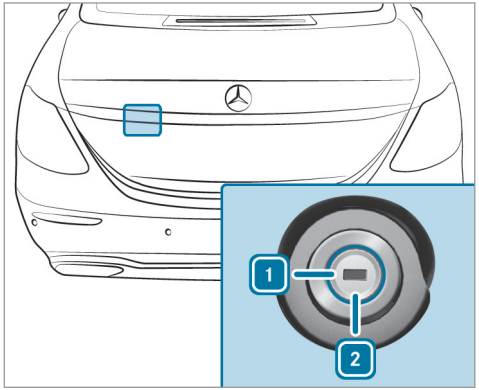

▶ Turn the emergency key counter-clockwise from position 1 to position 2.

▶ Turn the emergency key back to position 1 and remove it.

ⓘ If you use the emergency key to unlock and open the trunk lid, the anti-theft alarm system will be triggered.

Activating/deactivating the trunk lid opening height restriction

Multimedia system:

→ Vehicle ▸▸ Vehicle Settings ▸▸ Trunk Lid Restriction

This function allows you to avoid bumping the trunk lid on a low garage ceiling, for example.

▶ Activate ☑ or deactivate ☐ the function.

Side windows

Opening and closing the side windows

⚠ **WARNING** Risk of entrapment when opening a side window

When opening a side window, parts of the body could be drawn in or become trapped between the side window and window frame.

▶ When opening, make sure that nobody is touching the side window.

▶ If someone is trapped, release the button immediately or pull it in order to close the side window again.

⚠ **WARNING** Risk of becoming trapped when closing a side window

When closing a side window, body parts could be trapped in the closing area in the process.

▶ When closing, make sure that no body parts are in the closing area.

▶ If someone is trapped, release the button immediately or press the button in order to reopen the side window.

⚠ **WARNING** Risk of becoming trapped when children operate the side windows

Children could become trapped if they operate the side windows, particularly when unattended.

▶ Activate the child safety lock for the rear side windows.

▶ When leaving the vehicle, always take the SmartKey with you and lock the vehicle.

▶ Never leave children unattended in the vehicle.

Requirements:

- The power supply or the ignition is switched on.

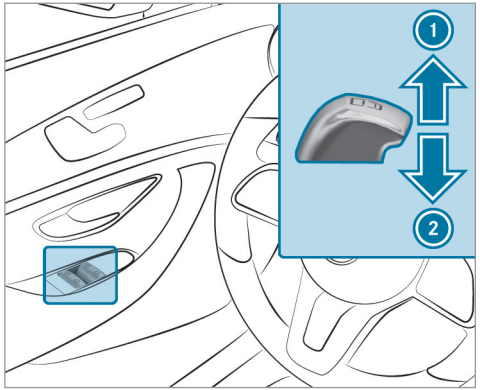

① Closes
② Opens

The buttons on the driver's door take precedence.

▶ **To start automatic operation:** press the [⊟] button beyond the point of resistance or pull and release it.

▶ **To interrupt automatic operation:** press or pull the [⊟] button again.

When the vehicle is switched off, the side windows can continue being operated.

This function is available for around four minutes or until a front door is opened.

ⓘ **Vehicles with electric roller sunblinds on rear doors on the left and right:** The buttons for the rear side windows also open and close the roller sunblinds (→ page 91).

Automatic reversing function of the side windows

If an object blocks a side window during the closing process, the side window will open again automatically. The automatic reversing function is only an aid and is not a substitute for your attentiveness.

▶ During the closing process, make sure that no body parts are in the closing area.

WARNING Risk of becoming trapped despite there being reversing protection on the side window

The reversing function does not react:

- To soft, light and thin objects, e.g. fingers
- During resetting

This means that the reverse function cannot prevent someone from becoming trapped in these situations.

▶ When closing, make sure that no body parts are in the closing area.

▶ If someone becomes trapped, press the [ ] button to open the side window again.

Convenience opening (ventilating the vehicle before starting a journey)

WARNING Risk of entrapment when opening a side window

When opening a side window, parts of the body could be drawn in or become trapped between the side window and window frame.

▶ When opening, make sure that nobody is touching the side window.

▶ Release the button immediately if somebody becomes trapped.

▶ Press and hold the [ ] button on the SmartKey.

The following functions are performed:

- The vehicle is unlocked
- The side windows are opened.
- The panoramic sliding sunroof is opened.
- The seat ventilation of the driver's seat is switched on.

ⓘ If the roller sunblinds of the panoramic sliding sunroof are closed, the roller sunblinds are opened first.

ⓘ If the roller sunblinds of the rear doors are closed, the roller sunblinds are opened first.

▶ **To interrupt convenience opening:** release the [ ] button.

▶ **To continue convenience opening:** press and hold the [ ] button again.

Convenience closing (closing the vehicle from outside)

WARNING Risk of entrapment caused by inadvertent convenience closing

When the convenience closing feature is operating, parts of the body could become trapped in the closing area of the side window and the sliding sunroof.

▶ Observe the complete closing procedure when using convenience closing.

▶ When closing, make sure that no body parts are in the closing area.

▶ Press and hold the [🔒] button on the SmartKey.

The following functions are performed:

- The vehicle is locked.
- The side windows are closed.
- The panoramic sliding sunroof is closed.

▶ **To interrupt convenience closing:** release the [🔒] button.

▶ **To close the roller sunblinds:** press and hold the [🔒] button again.

ⓘ Convenience closing can also be operated with KEYLESS-GO (→ page 69).

Problems with the side windows

⚠ **WARNING** Risk of becoming trapped or fatally injured if reversing protection is not activated

If you close a side window again immediately after it has been blocked, the side window will close with increased or maximum force. The reversing feature will then not be active.

Parts of the body could become trapped in the closing area in the process.

▶ Make sure that no parts of the body are in the closing area.

▶ To stop the closing process, release the button or press the button again to re-open the side window.

Problem	Possible causes/consequences and ▶ Solutions
A side window cannot be closed and you cannot see the cause.	▶ Check to see whether any objects are in the window guide. ▶ Adjust the side windows. **Adjusting the side windows** If a side window is obstructed during closing and reopens again immediately: ▶ Immediately after this, pull the corresponding button again until the side window has closed, and hold the button for at least one more second (re-adjustment). The side window is closed without the automatic reversing function.

Problem	Possible causes/consequences and ▶ Solutions
	If the side window is obstructed again and reopens again immediately: ▶ Immediately after this, pull the corresponding button again until the side window has closed, and hold the button for at least one more second (follow-up adjustment). The side window is closed without the automatic reversing function.
The side windows cannot be opened or closed using the convenience opening feature.	The SmartKey battery is weak or discharged. ▶ Check the battery using the indicator lamp and replace it if necessary (→ page 66).

Sliding sunroof

Opening/closing the sliding sunroof

⚠ **WARNING** Risk of becoming trapped while opening and closing the sliding sunroof

During opening and closing, parts of the body could get caught in the sweep of the sliding sunroof.

▶ When opening or closing, make sure that no body parts are in the sweep.

▶ Release the button immediately if somebody becomes trapped.

or

▶ Press the button in any direction during the automatic opening/closing process. The opening/closing process is stopped.

⚠ **WARNING** Risk of becoming trapped if the sliding sunroof is operated by children

Children operating the sliding sunroof could get caught in the moving parts, particularly if unattended.

▶ Never leave children unattended in the vehicle.

▶ When leaving the vehicle, always take the key with you and lock the vehicle.

WARNING Risk of becoming trapped while opening and closing the roller sun blind

When opening or closing, make sure that no body parts become trapped between the roller sun blind and frame or the sliding sunroof.

- ▶ When opening or closing, make sure that no body parts are in the sweep of the roller sun blind.
- ▶ Release the button immediately if somebody becomes trapped.

or

- ▶ Press the button in any direction during the automatic opening/closing process. The opening/closing process is stopped.

NOTE Malfunction caused by snow and ice

Snow and ice may lead to a malfunction of the sliding sunroof.

- ▶ Only open the sliding sunroof if it is free of snow and ice.

NOTE Damage caused by protruding objects

Objects that protrude from the sliding sunroof may damage the sealing strips.

- ▶ Do not allow anything to protrude from the sliding sunroof.

Requirements:

- The sliding sunroof can be operated only when the roller sunblind is open
- The roller sunblind can be operated only when the sliding sunroof is closed

ⓘ The term "sliding sunroof" refers to the panoramic sliding sunroof.

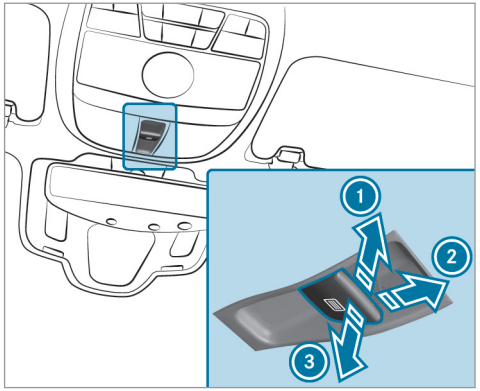

1. Raises
2. Opens
3. Closes/lowers

Use the button to operate the sliding sunroof and the front roller sunblind.

- ▶ **To start automatic operation:** press/pull the button beyond the point of resistance.

- **To interrupt automatic operation:** press/pull the button again.

Restriction: automatic operation for raising is available only when the sliding sunroof is closed or raised.

Operating the rear roller sunblind from the front

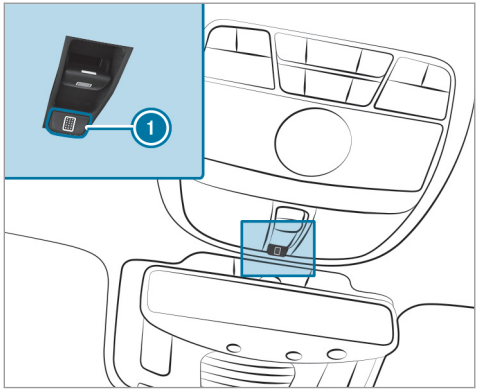

- **To open or close:** press button 1.
- **To stop:** press button 1 again.

You must first open or close the rear roller sunblind fully before you can move it in the other direction.

Operating the rear roller sunblind from the rear passenger compartment

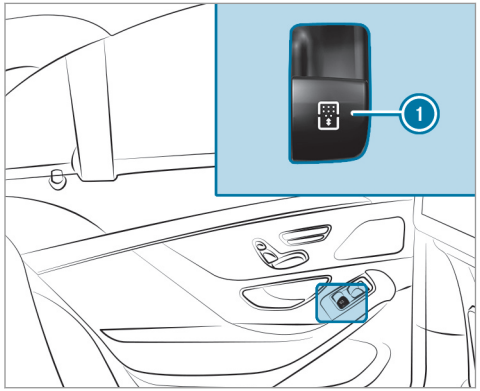

- **To open/close manually:** push or pull button 1 to the point of resistance and hold it until the roller sunblind has reached the desired position.
- **To open/close fully:** push or pull button 1 beyond the point of resistance and release it.

Automatic reversing feature of the sliding sunroof

If an object is obstructing the sliding sunroof during the closing process, the sliding sunroof will open again automatically. The automatic reversing feature is only an aid and is not a substitute for your attentiveness.

- During the closing process, make sure that no body parts are in the closing area.

⚠ **WARNING** Risk of becoming trapped despite reversing function

The reverse function does not react:

- to soft, light and thin objects, e.g. fingers
- during the last 1/6 in (4 mm) of travel during closing

- during resetting
- when the sliding sunroof is closed again manually immediately after automatic reversing

This means that the reverse function cannot prevent someone from becoming trapped in these situations.

▶ When closing, make sure that no body parts are in the closing area.
▶ Release the button immediately if somebody becomes trapped.

or

▶ Press the button in any direction during the automatic closing process.
The closing process will be stopped.

Automatic reversing feature of the roller sunblind

If an object is obstructing the roller sunblind during the closing process, the roller sunblind will open again automatically. The automatic reversing feature is only an aid and is not a substitute for your attentiveness.

▶ When closing the roller sunblind, make sure that no body parts are in the range of movement.

⚠ **WARNING** Risk of becoming trapped despite reversing feature

In particular, the reversing feature does not react to soft, light and thin objects, e.g. fingers.

This means that the reversing feature cannot prevent entrapment in these situations.

▶ When closing the roller sunblind, make sure that no body parts are in the range of movement.
▶ Release the button immediately if somebody becomes trapped.

or

▶ Press the button in any direction during the automatic closing process.
The closing process is stopped.

Automatic functions of the sliding sunroof

ⓘ The term "sliding sunroof" also refers to the panoramic sliding sunroof.

By pushing or pulling the button, you can interrupt the automatic functions: "Rain closing function when driving" and "Automatic lowering".

Rain closing function when driving

Vehicles with a panoramic sliding sunroof: If it starts to rain, the raised sliding sunroof is automatically lowered while the vehicle is in motion.

Automatic lowering function

Vehicles with a panoramic sliding sunroof: If the sliding sunroof is raised at the rear, it is automatically lowered slightly at higher speeds. At low speeds, it is raised again automatically.

⚠ **WARNING** Risk of entrapment by automatic lowering of the sliding sunroof

At high speeds the raised sliding sunroof automatically lowers slightly at the rear.

This could trap you or other persons.

- Make sure that nobody reaches into the sweep of the sliding sunroof whilst the vehicle is in motion.
- If somebody becomes trapped, briefly push the sliding sunroof button forwards or backwards.
  The sliding sunroof lifts during opening.

MAGIC SKY CONTROL

MAGIC SKY CONTROL function

MAGIC SKY CONTROL is a function with which you can change the transparency of the panoramic sliding sunroof. You can choose to have the front and rear elements of the panoramic sliding sunroof darkened or transparent.

⚠ **DANGER** Risk of fatal injury caused by touching electrical component parts of MAGIC SKY CONTROL

MAGIC SKY CONTROL operates using high voltage. If the roof lining is damaged or removed, electric component parts will be exposed.

If you touch these component parts, you could get an electric shock.

- Never remove the roof lining.
- If the roof lining is damaged, never touch the electrical component parts behind it.
- Always have work on MAGIC SKY CONTROL carried out at a qualified specialist workshop.

Operating MAGIC SKY CONTROL

Operating the front and rear elements from the front

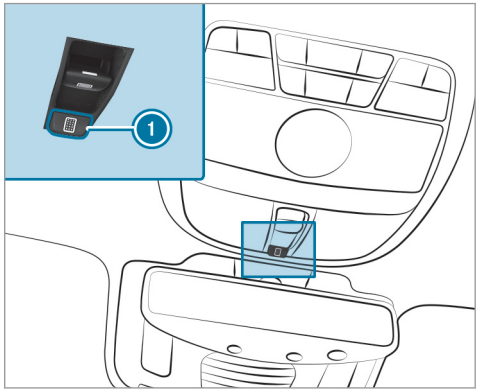

- Press button 1.
  If the rear element is in a different state from the front element: the transparency of the front element will change.

If both elements are in the same state: the transparency of both elements will change.

ⓘ When you switch off the power supply, both elements will darken automatically.
When you switch on the power supply or the ignition, both elements will return to the state they were in before the power supply was switched off.

Operating the rear element from the rear passenger compartment

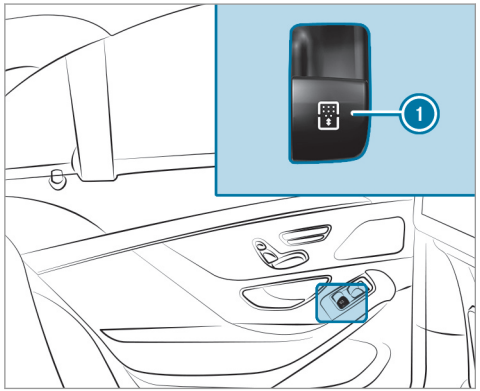

▶ If the roller sunblind is fully closed: pull button ①.
The roller sunblind will open. The transparency of the rear element will then change.

▶ If the roller sunblind is fully opened: press button ①.
The transparency of the rear element will change.

ⓘ The rear element will darken automatically if you close the rear roller sunblind.

Problems with the sliding sunroof

ⓘ The term "sliding sunroof" refers to the panorama roof with power tilt/sliding panel.

Problem	Possible causes/consequences and ▶ Solutions
The sliding sunroof cannot be closed and you cannot see the cause.	⚠ **WARNING** Risk of becoming trapped or fatal injury by closing the sliding sunroof again If you close the sliding sunroof again immediately after it has been blocked or reset, the sliding sunroof closes with increased or maximum force.

Problem	Possible causes/consequences and ▶ Solutions
	The reversing feature is then not active. Parts of the body could become trapped in the closing area in the process. ▶ Make sure that no parts of the body are in the closing area. ▶ Release the button immediately if somebody becomes trapped. or ▶ Press the button in any direction during the automatic closing process. The closing process is stopped. If the sliding sunroof is obstructed during closing and reopens again slightly: ▶ Immediately after automatic reversing, pull and hold the button down again to the point of resistance until the sliding sunroof is closed. The sliding sunroof will be closed with increased force. If the sliding sunroof is obstructed again and reopens again slightly: ▶ Repeat the previous step. The sliding sunroof will be closed again with increased force.
The sliding sunroof or the front roller sunblind does not move smoothly.	▶ Pull the button down repeatedly to the point of resistance until the sliding sunroof is fully closed. ▶ Pull the button for another second. ▶ Pull and hold the button down until the front roller sunblind is fully closed. ▶ Pull the button for another second.

Problem	Possible causes/consequences and ▶ Solutions
	▶ Use automatic operation to fully open and then close the sliding sunroof.
The rear roller sunblind does not move smoothly.	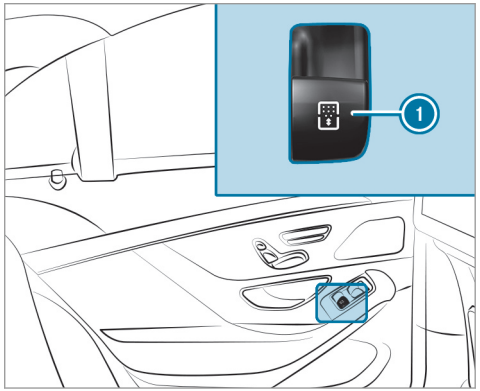 ▶ Pull and hold button ① down repeatedly until the rear roller sunblind is fully closed. ▶ Pull button ① for another second. ▶ Use automatic operation to fully open and then close the rear roller sunblind.

Roller sun blinds

Extending or retracting the roller sunblinds on the rear passenger compartment side windows

The roller sunblinds for the rear passenger compartment side windows can be operated with the buttons for the side windows.

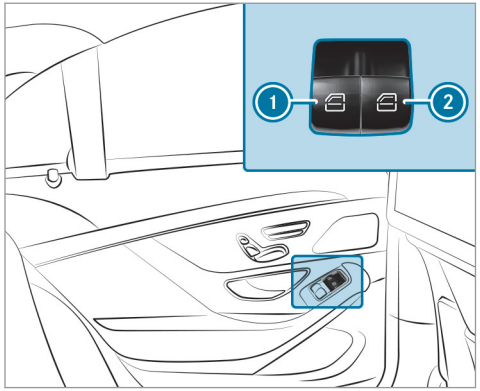

1 Rear left side window/roller sunblind
2 Rear right side window/roller sunblind

- **To close fully:** pull the corresponding button when the side window is closed or is in the process of closing.
- **To open fully:** press the corresponding button.

Extending or retracting the rear-window roller sunblind

WARNING Risk of entrapment when extending or retracting the roller sun blind

Body parts could become entrapped in the sweep of the roller sun blind when it is being extended or retracted.

- Make sure that no body parts are in the sweep of the roller sun blind when it is being extended or retracted.
- If someone becomes trapped, briefly press the button again.
  The opening or closing process is briefly stopped. The roller sun blind then returns to its starting position.

Extending or retracting from the driver's seat

NOTE Damage caused by objects

- Make sure that the roller sun blind can move freely.

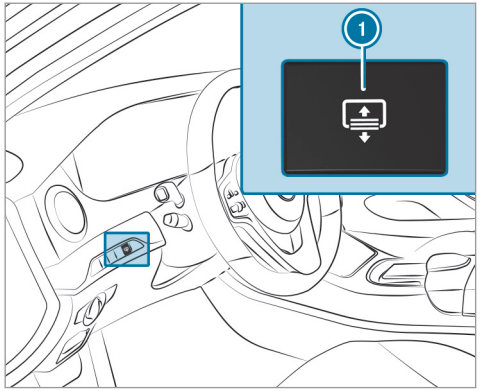

▶ Press button 1.

ⓘ Depending on the model, button 1 is located on the door control panel on the driver's side.

Extending or retracting from the rear passenger compartment

! **NOTE** Damage caused by objects

▶ Make sure that the roller sun blind can move freely.

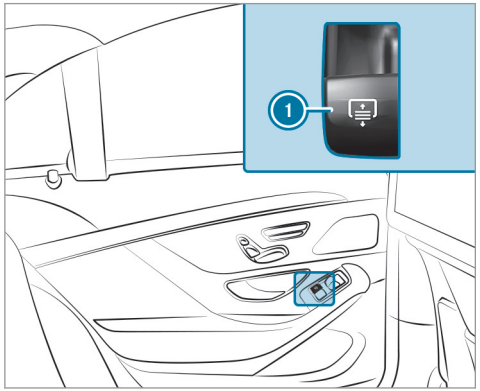

▶ **To extend:** pull switch 1.

▶ **To retract:** press switch 1.

When the child safety lock for the rear passenger compartment side windows is activated, switch 1 cannot be operated.

Anti-theft protection

Function of the immobilizer

The immobilizer prevents your vehicle from being started without the correct SmartKey.

The immobilizer is automatically activated when the ignition is switched off and deactivated when the ignition is switched on.

When leaving the vehicle, always take the SmartKey with you and lock the vehicle. Anyone can start the engine if a valid SmartKey has been left inside the vehicle.

ⓘ In the event the engine cannot be started (yet the vehicle's battery is charged), the system is not operational. Contact an authorized Mercedes-Benz Center or call 1-800-FOR-MERCedes (in the USA) or 1-800-387-0100 (in Canada).

ATA (anti-theft alarm system)

Function of the ATA system

If the ATA system is armed, a visual and audible alarm is triggered in the following situations:

- When a door is opened
- When the trunk lid is opened
- When the hood is opened
- When the interior motion sensor is triggered (→ page 94)
- When the tow-away alarm is triggered (→ page 94)

The ATA system is armed automatically after approximately ten seconds in the following situations:

- After locking the vehicle with the SmartKey
- After locking the vehicle using KEYLESS-GO

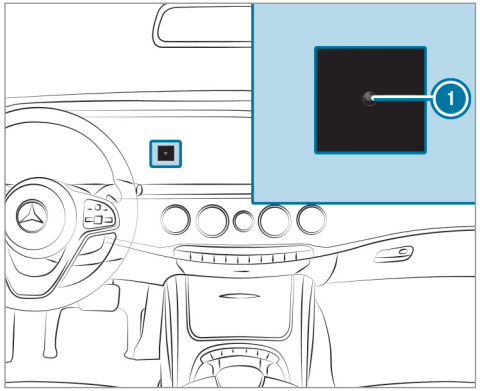

Indicator lamp 1 flashes when the ATA system is armed.

The ATA system is deactivated automatically in the following situations:

- After unlocking the vehicle with the SmartKey
- After unlocking the vehicle using KEYLESS-GO
- After pressing the start/stop button with the SmartKey in the stowage compartment (→ page 173)

ⓘ When the Mercedes-Benz emergency call system is active and the alarm stays on for more than 30 seconds, a message is automatically sent to the Customer Assistance Center (→ page 360).

ⓘ In the case of severe battery discharging, the anti-theft alarm system is automatically deactivated to facilitate the next engine start.

Deactivating the ATA

▶ Press the [ ], [ ] or [ ] button on the SmartKey.

or

▶ Press the start/stop button with the SmartKey in the marked space (→ page 173)

Deactivating the alarm using KEYLESS-GO

▶ Grasp the outside door handle with the SmartKey outside the vehicle.

Function of the tow-away alarm

ⓘ This function may not be available in all countries.

An audible and visual alarm is triggered if an alteration to your vehicle's angle of inclination is detected while the tow-away alarm is armed.

The tow-away alarm is automatically armed after approximately 60 seconds:

- After locking the vehicle with the SmartKey
- After locking the vehicle using KEYLESS-GO

The tow-away alarm is only armed when the following components are closed:

- The doors
- The trunk lid

The tow-away alarm is automatically deactivated:

- After pressing the [ ] or [ ] button on the SmartKey
- After pressing the start/stop button with the SmartKey in the marked space (→ page 173)
- After unlocking the vehicle using KEYLESS-GO
- When using HANDS-FREE ACCESS

Information on detecting damage on a parked vehicle (→ page 199).

Arming/disarming the tow-away alarm

Multimedia system:

Vehicle ▸▸ [ ] Vehicle Settings ▸▸ Tow-away Protection

▶ Activate ☑ or deactivate ☐ the function.

The tow-away alarm is armed again in the following cases:

- The vehicle is unlocked again.
- A door is opened.
- The vehicle is locked again.

Function of the interior motion sensor

ⓘ This function may not be available in all countries.

When the interior motion sensor is armed, a visual and audible alarm is triggered if movement is detected in the vehicle interior.

The interior motion sensor is armed automatically after approximately ten seconds:

- After locking the vehicle with the SmartKey
- After locking the vehicle using KEYLESS-GO

The interior motion sensor is only armed when the following components are closed:

- The doors
- The trunk lid

The interior motion sensor is automatically deactivated:

- After pressing the [ ] or [ ] button on the SmartKey
- After pressing the start/stop button with the SmartKey in the stowage compartment (→ page 173)
- After unlocking the vehicle using KEYLESS-GO
- When using HANDS-FREE ACCESS

The following situations can lead to a false alarm:

- Moving objects such as mascots in the vehicle interior
- When the side window is open
- When the panoramic sliding sunroof is open

Activating/deactivating the interior motion sensor

Multimedia system:

→ Vehicle ▸▸ Vehicle Settings ▸▸ Interior Motion Sensor

▶ Activate ☑ or deactivate ☐ the function.

The interior motion sensor is activated again in the following cases:

- The vehicle is unlocked again.
- A door is opened.
- The vehicle is locked again.

Notes on the correct driver's seat position

⚠ **WARNING** Risk of injury from adjusting the vehicle settings while the vehicle is in motion

You could lose control of the vehicle in the following situations:

- if you adjust the driver's seat, the head restraint, the steering wheel or the mirror while the vehicle is in motion
- if you fasten your seat belt while the vehicle is in motion

▶ Before starting the engine: adjust the driver's seat, the head restraint, the steering wheel or the mirror and fasten your seat belt.

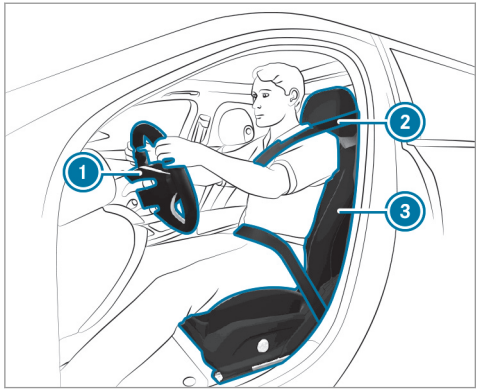

Ensure the following when adjusting steering wheel ①, seat belt ② and driver's seat ③:

- You are sitting as far away from the driver's airbag as possible, taking the following points into consideration.
- You are sitting in an upright position
- Your thighs are slightly supported by the seat cushion
- Your legs are not fully extended and you can depress the pedals properly
- The back of your head is supported at eye level by the center of the head restraint
- You can hold the steering wheel with your arms slightly bent
- You can move your legs freely
- You can see all the displays on the instrument cluster clearly
- You have a good overview of the traffic conditions
- Your seat belt sits snugly against your body and passes across the center of your shoulder and across your hips in the pelvic area

Seats

Adjusting the front seat electrically

⚠ **WARNING** Risk of becoming trapped if the seats are adjusted by children

Children could become trapped if they adjust the seats, particularly when unattended.

- ▶ When leaving the vehicle, always take the SmartKey with you and lock the vehicle.
- ▶ Never leave children unattended in the vehicle.

The seats can be adjusted when the ignition is switched off.

⚠ **WARNING** Risk of becoming trapped when adjusting the seats

When you adjust a seat, you or other vehicle occupants could become trapped, e.g. on the seat guide rail.

- ▶ When adjusting a seat, make sure that no one has any body parts in the sweep of the seat.

Observe the safety notes on "Airbags" and "Children in the vehicle".

⚠ **WARNING** Risk of injury from adjusting the vehicle settings while the vehicle is in motion

You could lose control of the vehicle in the following situations:

- if you adjust the driver's seat, the head restraint, the steering wheel or the mirror while the vehicle is in motion
- if you fasten your seat belt while the vehicle is in motion

- ▶ Before starting the engine: adjust the driver's seat, the head restraint, the steering wheel or the mirror and fasten your seat belt.

⚠ **WARNING** Risk of becoming trapped if the seat height is adjusted carelessly

If you adjust the seat height carelessly, you or other vehicle occupants could be trapped and thereby injured.

Children in particular could accidentally press the electrical seat adjustment buttons and become trapped.

- ▶ While moving the seats, make sure that hands or other body parts do not get under the lever assembly of the seat adjustment system.

⚠ **WARNING** Risk of injury due to head restraints which are not installed or are adjusted incorrectly

If head restraints are not installed or are adjusted incorrectly, the head restraints cannot provide protection as intended.

There is an increased risk of injury in the head and neck area, e.g. in the event of an accident or when braking.

- ▶ Always drive with the head restraints installed.
- ▶ Before driving off, make sure for every vehicle occupant that the center of the head restraint supports the back of the head at about eye level.

Do not interchange the head restraints of the front and rear seats. Otherwise, you will not be able to adjust the height and angle of the head restraints correctly.

Adjust the head restraint fore-and-aft position so that it is as close as possible to the back of your head.

WARNING Risk of injury or death due to incorrect seat position

The seat belt does not offer the intended level of protection if you have not moved the seat backrest to an almost vertical position.

When braking or in the event of an accident, you could slide underneath the seat belt and sustain abdominal or neck injuries, for example.

- ▶ Adjust the seat properly before beginning your journey.
- ▶ Always ensure that the seat backrest is in an almost vertical position and that the shoulder section of your seat belt is routed across the center of your shoulder.

NOTE Damage to the seats when moving the seats back

The seats may be damaged by objects when moving the seats back.

- ▶ When moving the seats back, make sure that there are no objects in the footwell, under or behind the seats.

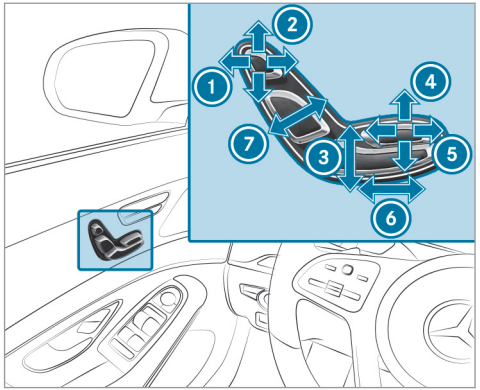

1. Head restraint height/fore-and-aft position (vehicles with an EASY ADJUST luxury head restraint)
2. Head restraint height
3. Seat height
4. Seat cushion inclination
5. Seat cushion length

⑥ Seat fore-and-aft position
⑦ Seat backrest inclination

▶ Save the settings with the memory function (→ page 120).

ⓘ The head restraint height will be adjusted automatically when you adjust the seat height or the seat fore-and-aft position.

ⓘ **Vehicles with EASY ADJUST luxury head restraints:** The fore-and-aft position of the head restraint will be pre-adjusted automatically when you adjust the backrest angle.

Adjusting the front passenger seat electrically from the driver's seat

Requirements:

- For selecting the front passenger seat: the power supply is switched on

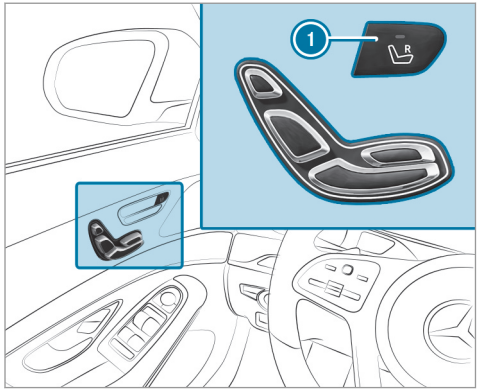

You can call up the following functions for the front passenger seat:

- Seat adjustment
- Seat heating
- Seat ventilation
- Memory function

▶ **To select the front passenger seat:** press button ①.
When the indicator lamp lights up, the front passenger seat is selected.

▶ Adjust the front passenger seat using the buttons on the driver's side door control panel.

Adjusting the front passenger seat electrically from the rear passenger compartment

Requirements:

- For selecting the front passenger seat: the power supply is switched on

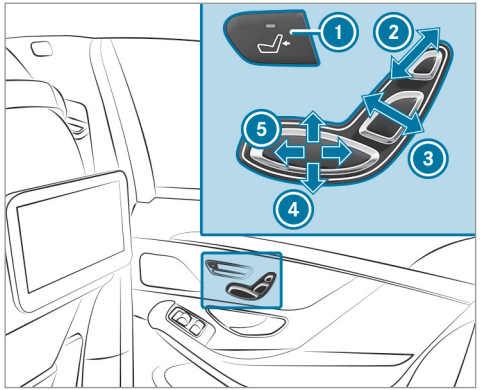

Vehicles with electrically adjustable outer seats

1. Selects the front passenger seat
2. Head restraint height
3. Seat backrest inclination
4. Seat height
5. Seat fore-and-aft position

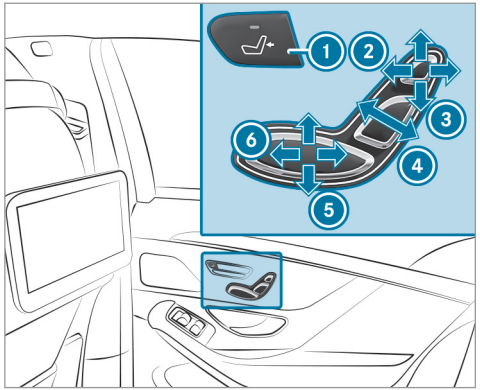

Vehicles with an EASY ADJUST luxury head restraint

1. Selects the front passenger seat
2. Head restraint fore-and-aft position
3. Head restraint height
4. Seat backrest inclination
5. Seat height
6. Seat fore-and-aft position

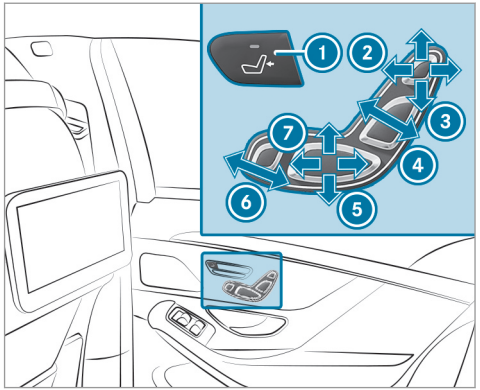

Vehicles with seat for chauffeur mode and long wheelbase

1. Selects the front passenger seat
2. Head restraint fore-and-aft position
3. Head restraint height
4. Seat backrest inclination
5. Seat height
6. Footrest
7. Seat fore-and-aft position

The footrest can be adjusted only when one of the following conditions has been fulfilled:

- The front passenger seat has been moved fully forward
- The front passenger seat is in the position for chauffeur mode

▶ Adjust the rear seat (→ page 101).

▶ Adjust the reclining rear seat (→ page 102).

▶ **To select the front passenger seat:** press button ①.
When the indicator lamp lights up, the front passenger seat is selected.

▶ Adjust the front passenger seat using the buttons on the door control panel in the rear passenger compartment.

ⓘ **Mercedes-Maybach vehicles:** it is sufficient to adjust the footrest if the front passenger seat is moved into the center setting area.

ⓘ You can use the rear-compartment child safety lock to disable this function (→ page 63).

Adjusting the rear seats electrically

⚠ **WARNING** Risk of injury or death due to incorrect seat position

The seat belt does not offer the intended level of protection if you have not moved the seat backrest to an almost vertical position.

When braking or in the event of an accident, you could slide underneath the seat belt and sustain abdominal or neck injuries, for example.

▶ Adjust the seat properly before beginning your journey.

▶ Always ensure that the seat backrest is in an almost vertical position and that the shoulder section of your seat belt is routed across the center of your shoulder.

You can electrically adjust only the outer seats in the rear passenger compartment.

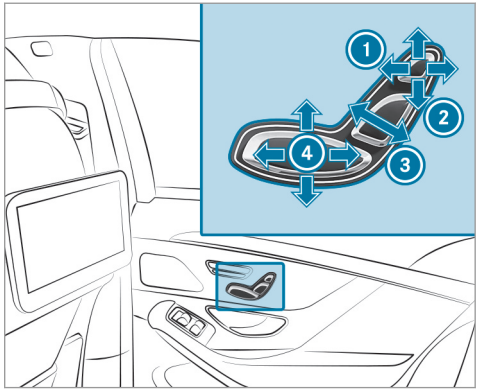

① Height/fore-and-aft position of the head restraint (vehicles with active multicontour seat)
② Head restraint height
③ Seat backrest inclination
④ Combined seat cushion inclination and length

▶ Save the settings with the memory function (→ page 121).

Adjusting a reclining rear seat electrically

The reclining rear seat is available in long-wheelbase vehicles equipped with "Executive seats". On vehicles without a reclining rear seat, the button for setting the angle and fore-and-aft position of the leg rest has no function.

Long-wheelbase vehicles: the reclining rear seat is on the front passenger side.

Mercedes-Maybach vehicles: the reclining rear seats are on the driver's and front passenger sides.

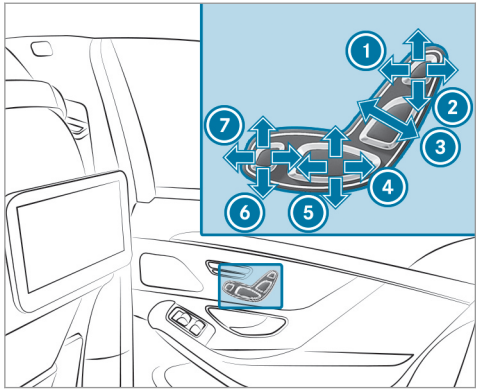

1. Height/fore-and-aft position of the head restraint (vehicles with active multicontour seat)
2. Head restraint height
3. Seat backrest inclination
4. Combined seat cushion inclination and length
5. Combined seat cushion inclination and length
6. Angle of the leg rest
7. Fore-and-aft position of the leg rest

▶ Save the settings with the memory function (→ page 121).

ⓘ The leg rest will fold down if overloaded. If this is the case, fold up the leg rest and engage it.

ⓘ Vehicles with a long wheelbase and a rear compartment Chauffeur/Rear Seat Memory Package also have a footrest. This is located on the lower part of the front passenger seat backrest (→ page 99).

Setting the fully reclined position

Requirements:

- The power supply is switched on.

This function is available in long-wheelbase vehicles.

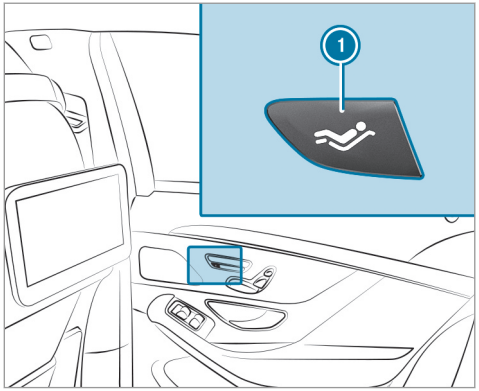

▶ **To set the fully reclined position:** press button 1.
- The rear seat will move into the reclined position
- The front passenger seat will move into the position for chauffeur mode
- The footrest will move out from under the front passenger seat
- If available, the leg rest will rise

▶ **To set the upright position:** manually adjust the seat to the desired position.

or

▶ Call up the settings with the memory function (→ page 121).

ⓘ You can use the rear-compartment child safety lock to disable this function (→ page 63).

ⓘ The leg rest will fold down if overloaded. If this is the case, fold up the leg rest and engage it.

Chauffeur mode

Information on chauffeur mode

⚠ **WARNING** Risk of injury due to head restraints which are not installed or are adjusted incorrectly

If head restraints are not installed or are adjusted incorrectly, the head restraints cannot provide protection as intended.

There is an increased risk of injury in the head and neck area, e.g. in the event of an accident or when braking.

▶ Always drive with the head restraints installed.

▶ Before driving off, make sure for every vehicle occupant that the center of the head restraint supports the back of the head at about eye level.

Do not interchange the head restraints of the front and rear seats. Otherwise, you will not be able to adjust the height and angle of the head restraints correctly.

Adjust the head restraint fore-and-aft position so that it is as close as possible to the back of your head.

⚠ **WARNING** Risk of accident with the front passenger head restraint folded down

If the front passenger seat is in the chauffeur mode position and the front passenger head

restraint is folded down, the view of the passenger's outside mirror can be impaired.

▶ To have a free view of the outside mirror, remove the front passenger head restraint before beginning a journey.

! NOTE Damage to objects in the luggage net of the front passenger footwell when adjusting the front passenger seat to the chauffeur position

Objects in the luggage net in the front passenger footwell can become damaged when the front passenger seat is adjusted to the chauffeur position.

▶ Remove the objects from the luggage net.

! NOTE Damage to the seats when moving the seats back

The seats may be damaged by objects when moving the seats back.

▶ When moving the seats back, make sure that there are no objects in the footwell, under or behind the seats.

Observe the following:

- Adjust the front passenger seat for chauffeur mode before the journey
- Do not remove the front passenger seat head restraint during the journey

For chauffeur mode, the following settings are made for the front passenger seat:

- The seat is moved forwards
- The backrest is tilted forwards
- The head restraint is folded forwards

The front passenger seat will automatically move from the chauffeur position back into the normal position in the following situations:

- The front passenger seat is adjusted using the buttons on the door control panel on the front passenger side
- The front passenger seat belt is fastened
- An occupant is detected on the front passenger seat
- The front passenger head restraint is inserted and the power supply is switched on
- The front passenger backrest is adjusted rearwards
- The front passenger seat is moved in the fore-and-aft direction out of the chauffeur area

Positioning the front passenger seat for chauffeur mode

Requirements:

- The power supply is switched on.
- The front passenger seat is not occupied.
- The front passenger seat belt is not inserted into the buckle.

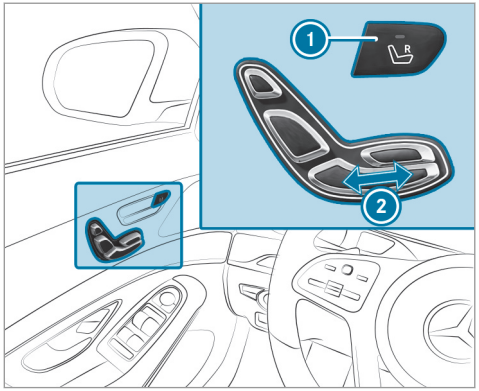

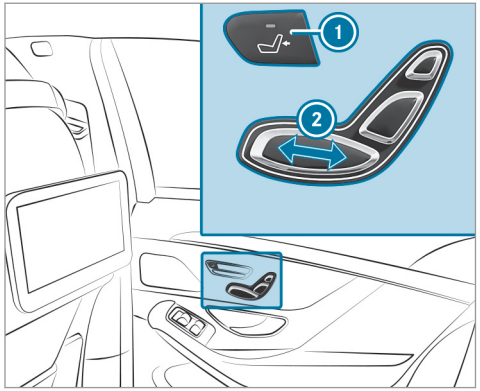

▶ **To select the front passenger seat:** press button ①.
When the indicator lamp lights up, the front passenger seat is selected.

Setting the chauffeur position

▶ Press button ② forwards and hold it in this position.
The front passenger seat will move forward and stop at the threshold of the area for chauffeur mode.

▶ Release button ②.

▶ Press forward and hold button ② again until the front passenger seat is in position for chauffeur mode.
The front passenger head restraint will fold forwards. The front passenger seat will move forward.

The To view the ext. mirror, adjust front-passenger seat or remove the head restraint. display message will appear on the multi-function display.

ⓘ If the front passenger seat is already at the threshold to the area for chauffeur mode, the position for chauffeur mode will be set immediately.

▶ Save the settings with the memory function (→ page 121).

ⓘ You can use the rear-compartment child safety lock to disable this function (→ page 63).

Removing or installing the front passenger head restraints (chauffeur mode)
Requirements:

- The front passenger head restraint is folded completely forward

Removing the head restraint

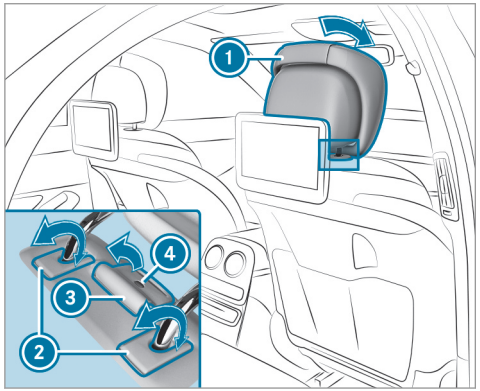

- ▶ Fold head restraint bar covers ② towards the rear.
- ▶ Hold front passenger head restraint ① tightly.
- ▶ Pull adjuster lever ③ towards the rear and hold it in this position.
- ▶ Remove front passenger head restraint ①.
- ▶ Release adjuster lever ③.
  Red pin ④ protrudes from the adjuster lever.
- ▶ Press down red pin ④.
- ▶ Fold covers ② forwards and close them.

Inserting the head restraint

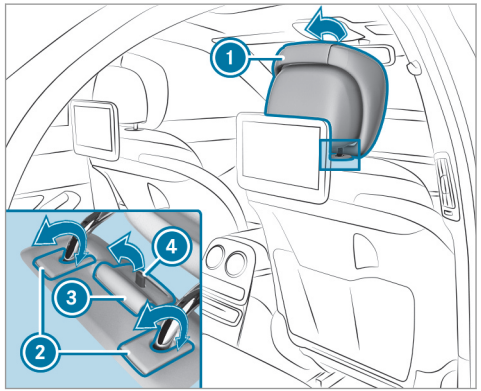

- ▶ Fold head restraint bar covers ② towards the rear.

- ▶ Pull handle ③ towards the rear.
  Red pin ④ protrudes from the adjuster lever.
- ▶ Insert front passenger head restraint ① into the brackets.
  The front passenger head restraint must engage on both sides.
- ▶ Press down red pin ④.
  If pin ④ can be pressed down and is then no longer visible, the front passenger head restraint has engaged correctly.
- ▶ Fold covers ② forwards and close them.
  The front passenger head restraint folds into position automatically.

Moving the front passenger seat into the normal position (chauffeur mode)
Requirements:

- For selecting the front passenger seat: the power supply is switched on
- The front passenger head restraint is installed

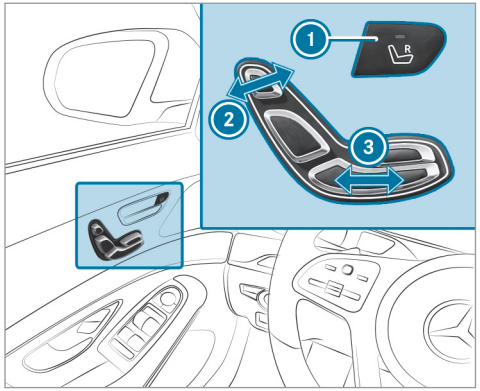

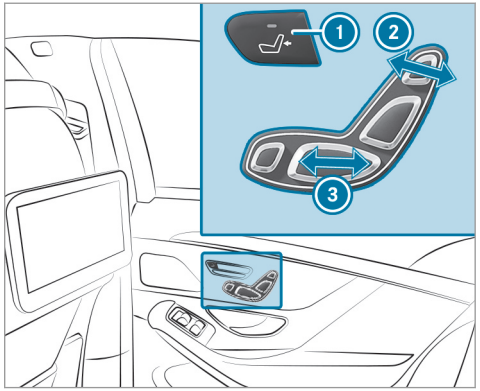

- ▶ **To select the front passenger seat:** press button ①.
  When the indicator lamp lights up, the front passenger seat is selected.

Setting the normal position

- ▶ Press button ③ towards the rear and hold it in this position.
  The front passenger seat will move to the threshold of the area for chauffeur mode.

The front passenger head restraint will fold into position.

The front passenger seat will then move further towards the rear.

or

▶ Briefly press button ② towards the rear. The front passenger seat will move automatically to the threshold of the area for chauffeur mode. The front passenger head restraint will fold into position.

ⓘ You can also set the normal position from the front passenger seat. To do so, press any button on the door control panel on the front passenger side.

▶ Call up the settings with the memory function (→ page 121).

ⓘ You can use the rear-compartment child safety lock to disable this function (→ page 63).

Setting the fully reclined position of the front passenger seat (chauffeur mode)

Setting the reclined position

This function is available in vehicles with the following equipment:

- Electrically adjustable rear seats
- Individual rear seat without a leg rest

You can move the front passenger seat into a fully reclined position. The rear seat and front passenger seat will then provide a continuous surface.

▶ Put the seat cushion of the rear seat all the way back in the fore-and-aft position (→ page 101).

▶ Move the front passenger seat into position for chauffeur mode (→ page 104).

▶ Remove the front passenger head restraint (→ page 106).

▶ Move the front passenger seat so that the backrest is in a fully reclined position (→ page 96).

Leaving the reclined position

▶ Fold the front passenger seat backrest upright to a suitable position.

▶ Install the front passenger head restraint (→ page 106).

Head restraints

Adjusting the front seat head restraints mechanically

⚠ **WARNING** Risk of injury from adjusting the vehicle settings while the vehicle is in motion

You could lose control of the vehicle in the following situations:

- if you adjust the driver's seat, the head restraint, the steering wheel or the mirror while the vehicle is in motion
- if you fasten your seat belt while the vehicle is in motion

▶ Before starting the engine: adjust the driver's seat, the head restraint, the

steering wheel or the mirror and fasten your seat belt.

WARNING Risk of injury due to head restraints which are not installed or are adjusted incorrectly

If head restraints are not installed or are adjusted incorrectly, the head restraints cannot provide protection as intended.

There is an increased risk of injury in the head and neck area, e.g. in the event of an accident or when braking.

- Always drive with the head restraints installed.
- Before driving off, make sure for every vehicle occupant that the center of the head restraint supports the back of the head at about eye level.

Do not interchange the head restraints of the front and rear seats. Otherwise, you will not be able to adjust the height and angle of the head restraints correctly.

Adjust the head restraint fore-and-aft position so that it is as close as possible to the back of your head.

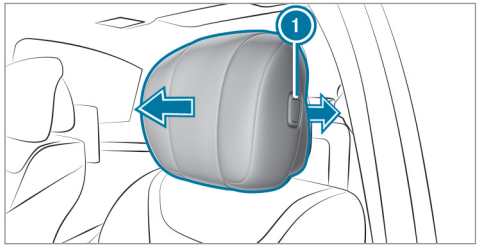

- **To move forwards:** pull the head restraint forwards.
- **To move backwards:** press release knob 1 and push the head restraint backwards.

Adjusting the front-seat luxury head restraints mechanically

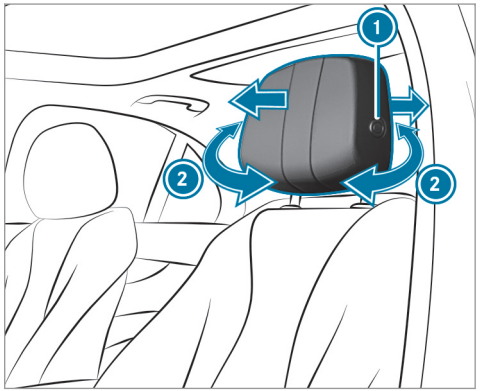

- **To adjust the side bolsters of the head restraint:** pull or push right or left-hand side bolster 2.
- **To move forwards:** pull the head restraint forwards.

▶ **To move backwards:** press release knob ① and push the head restraint backwards.

Adjusting the EASY ADJUST luxury head restraints on the front seats mechanically

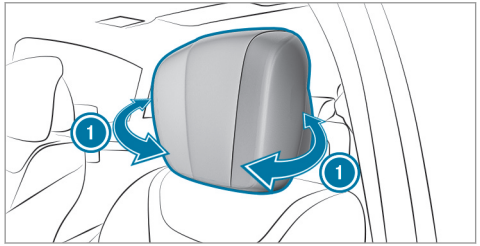

▶ **To adjust the side bolsters of the head restraint:** pull or push right or left-hand side bolster ①.

ⓘ The fore-and-aft position of the head restraint will be adjusted automatically when you adjust the backrest using the buttons on the door control panel.

Lowering the rear seat head restraints electrically from the front compartment
Requirements:

- The power supply is switched on.

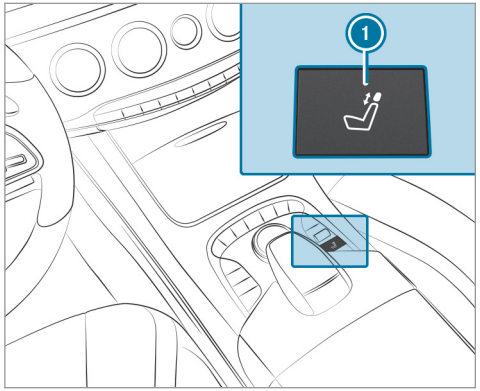

▶ Press button ①.

ⓘ Depending on the model, the button is located on the door control panel on the driver's side.

ⓘ If all the rear seat head restraints are lowered and button ① is pressed again, the outer rear head restraints will move into the last stored position (→ page 111).

Extending the outer rear seat head restraints electrically from the front
Requirements:

- The power supply is switched on.

This function is available on vehicles with electrically adjustable rear seats.

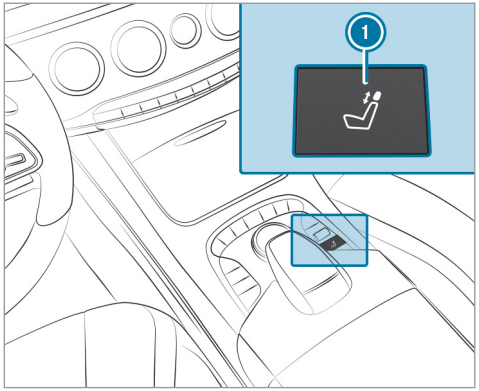

▶ Press and hold button 1 until the head restraints have extended upwards.

ⓘ Depending on the model, the button is located on the door control panel on the driver's side.

Extending the outer rear seat head restraints to the last stored position

Requirements:

- The power supply is switched on.

This function is available on vehicles with electrically adjustable rear seats.

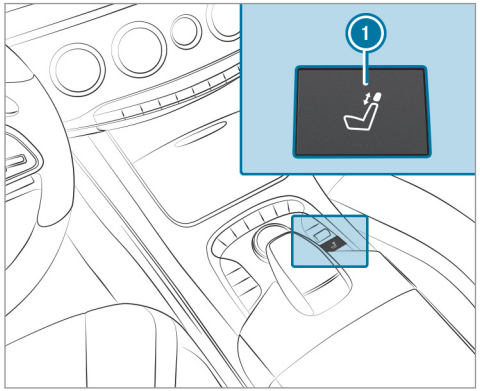

▶ Briefly press button 1.
The head restraints lower.

▶ Briefly press button 1 again.
The head restraints will move to the last stored position.

ⓘ Depending on the model, the button is located on the door control panel on the driver's side.

Adjusting the rear seat outer head restraints mechanically

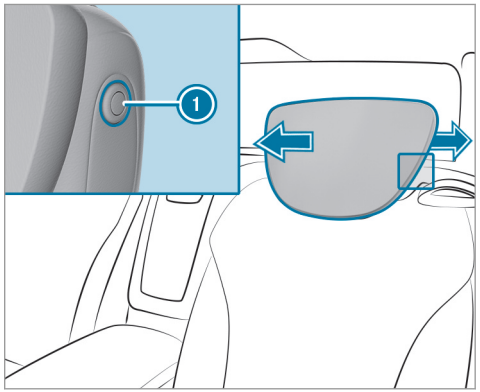

▶ **To move forwards:** pull the head restraint forwards.

- **To move backwards:** press release knob ① and push the head restraint backwards.

Adjusting the outer luxury head restraints of the rear seats mechanically

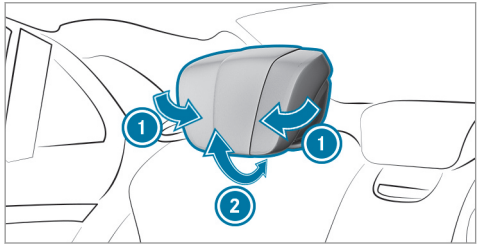

- **To adjust the side bolsters:** push or pull right and/or left-hand side bolster ① into the desired position.
- **To adjust the angle of the head restraint:** pull or push the head restraint in the direction of arrow ②.

Attaching and removing the supplementary cushion of the luxury head restraint in the rear passenger compartment

The supplementary cushion is available on vehicles with electrically adjustable rear seats.

Use the supplementary cushion only when the vehicle is stationary. The supplementary cushion is in the vehicle.

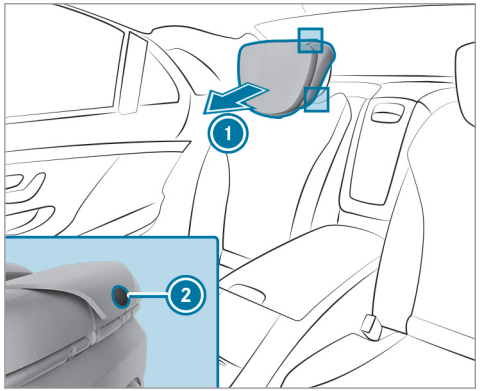

- Position the head restraint as far forwards as possible.
- **To attach the supplementary cushion:** hold supplementary cushion ① against the head restraint and push press studs ② into the counterpieces.
- **To remove the supplementary cushion:** release press studs ② and remove supplementary cushion ①.

Extending or retracting the rear seat center head restraint electrically

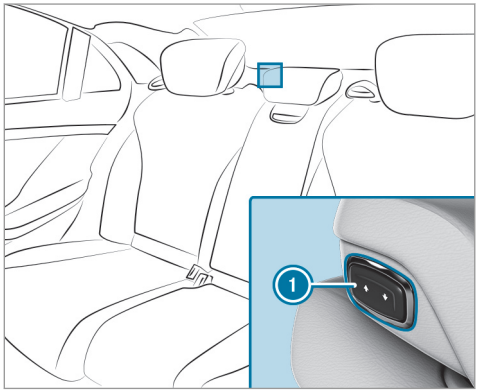

▶ Press and hold button ① until the head restraint has extended or retracted.

Setting the center head restraint into position mechanically

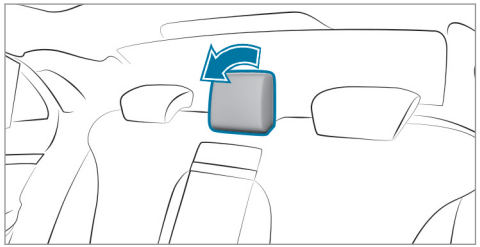

▶ Pull the head restraint up until it engages.

Configuring the seat settings

Requirements:

- The ignition is switched on.

Multimedia system:

→ Vehicle ▸▸ Seats

▶ Select Driver's Seat or Passenger Seat.

Adjusting the backrest side bolsters

▶ Select Side Bolsters.

▶ Select the setting.

Adjusting the seat contour in the lumbar region of the seat backrest (lumbar)

▶ Select Lumbar.

▶ Adjust the air cushion.

Setting the shoulder section

▶ Select Shoulders.

▶ Select the settings.

Setting the seat heating balance

▶ Select Seat Heating Balance.

▶ Select the settings.

Memory function

▶ Save the seat adjustments with the memory function (→ page 120).

Setting automatic adjustment of the lateral support (active multicontour seat)

Multimedia system:

Vehicle ▸▸ Seats

With this function, the lateral support of the active multicontour seat is automatically adjusted to the driving and cornering dynamics of the vehicle.

- Select Driver's Seat or Passenger Seat.
- Select Dynamic Seat.
- **Select setting:** Off, Level 1 or Level 2.

Overview of massage and workout programs

Massage programs

The following programs can be selected:

- Hot Relaxing Back
- Hot Relaxing Shoulder
- Activating Massage
- Classic Massage
- Mobilizing Massage

Active Workout

The Act. Workout Back program requires your active cooperation. Alternating between tensing and releasing helps to improve blood flow to your muscles. Press against a pressure point as soon as you feel it.

Selecting the massage program for the front seats

Multimedia system:

Vehicle ▸▸ Seats

- Select Driver's Seat or Passenger Seat.
- Select Massage.
- Select a massage program.
  The massage program runs for approximately 8 to 18 minutes, depending on the setting.
- To set the massage intensity: switch High Intensity on ☑ or off ☐.

Resetting the seat and massage settings

Multimedia system:

Vehicle ▸▸ Seats ▸▸ Reset

- Select Yes or No.

ⓘ Only the currently selected seat is reset.

Switching the seat heating on/off

⚠ **WARNING** Risk of burns due to repeatedly switching on the seat heating

Repeatedly switching on the seat heating can cause the seat cushion and seat backrest padding to become very hot.

The health of persons with limited temperature sensitivity or a limited ability to react to high temperatures may be affected or they may even suffer burn-like injuries.

- Do not repeatedly switch on the seat heating.

To protect against overheating, the seat heating may be temporarily deactivated after it is switched on repeatedly.

NOTE Damage to the seats caused by objects or documents when the seat heating is switched on

When the seat heating is switched on, overheating may occur due to objects or documents placed on the seats, e.g. seat cushions or child seats. This could cause damage to the seat surface.

▶ Make sure that no objects or documents are on the seats when the seat heating is switched on.

Requirements:

- The power supply is switched on.

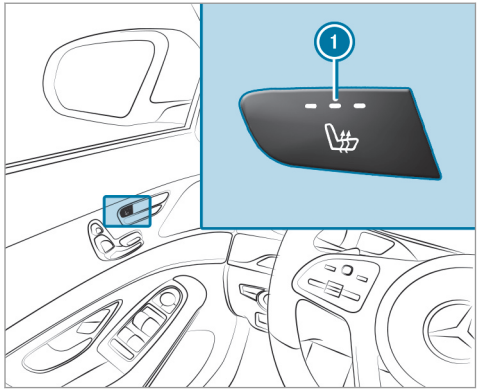

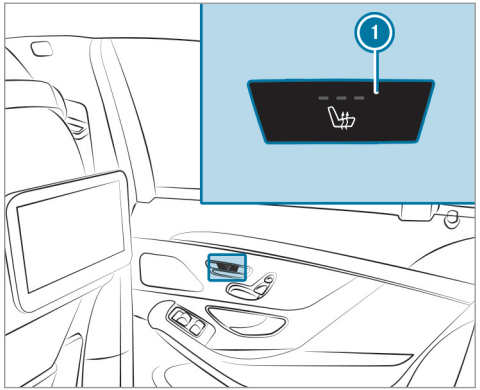

▶ **To switch on/increase the level:** press button 1 repeatedly until the desired heating level is set.
Depending on the heating level, up to three indicator lamps will light up.

▶ **To switch off/reduce the level:** press button ① repeatedly until the desired heating level is set.
If all indicator lamps are off, the seat heating is switched off.

ⓘ The seat heating will automatically switch down from the three heating levels after 8, 10 and 20 minutes until the seat heating switches off.

ⓘ If you switch the power supply off and on again within 20 minutes, the previous setting of the seat heating for the driver's seat will remain active.

ⓘ You can set the distribution of the heated sections of the seat cushions and seat backrests on the front and rear seats using the multimedia system (→ page 116).

ⓘ Vehicles with the Warmth Comfort Package: you can adjust the heating of the center console and the door armrests using the multimedia system (→ page 116).

Setting the panel heating

Requirements:

- The seat heating is switched on (→ page 114).

Multimedia system:

Vehicle ▸▸ Vehicle Settings ▸▸ Panel Heating

▶ Select one or more seats.
The armrests of the selected seats and the center console are heated.

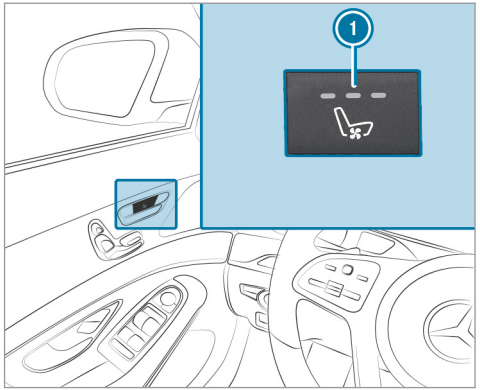

Switching the seat ventilation on/off

Requirements:

- The power supply is switched on.

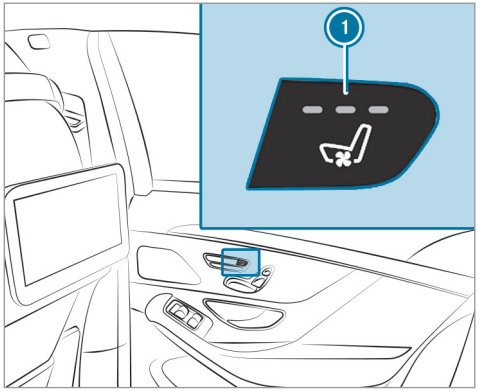

▶ **To switch on/increase the level:** press button (1) repeatedly until the desired ventilation level is set.
Depending on the ventilation level, up to three indicator lamps will light up.

▶ **To switch off/reduce the level:** press button (1) repeatedly until the desired ventilation level is set.
If all indicator lamps are off, the seat ventilation is switched off.

ⓘ If you switch the power supply off and on again within 20 minutes, the previous seat ventilation setting for the driver's seat will remain active.

Steering wheel

Adjusting the steering wheel electrically

⚠ **WARNING** Risk of injury from adjusting the vehicle settings while the vehicle is in motion

You could lose control of the vehicle in the following situations:

- if you adjust the driver's seat, the head restraint, the steering wheel or the mirror while the vehicle is in motion
- if you fasten your seat belt while the vehicle is in motion

▶ Before starting the engine: adjust the driver's seat, the head restraint, the steering wheel or the mirror and fasten your seat belt.

⚠ **WARNING** Risk of entrapment for children when adjusting the steering wheel

Children could injure themselves if they adjust the steering wheel.

▶ Never leave children unattended in the vehicle.

▶ When leaving the vehicle, always take the SmartKey with you and lock the vehicle.

The steering wheel can be adjusted when the power supply is disconnected.

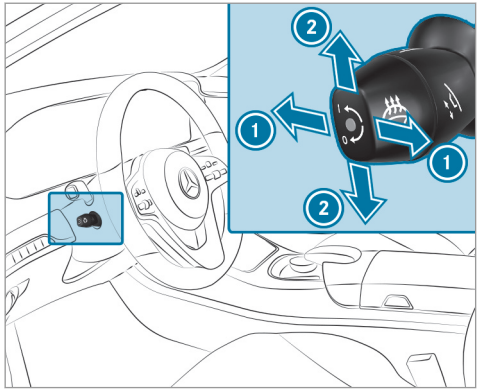

① To adjust the distance to the steering wheel
② To adjust the height

▶ Save the settings with the memory function (→ page 120).

Switching the steering wheel heater on/off

Requirements:

- The power supply or the ignition is switched on.

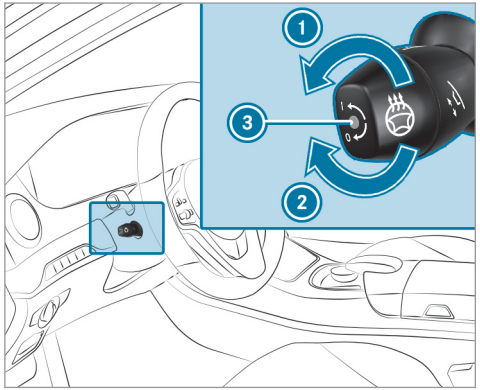

▶ Turn the lever in the direction of arrow ① or ②.
If indicator lamp ③ lights up, the steering wheel heater is switched on.

When you switch the ignition off, the steering wheel heater will switch off.

Easy entry and exit feature

Using the easy entry and exit feature

⚠ **WARNING** Risk of accident when driving off while adjusting the easy exit feature

- If you drive off while the easy entry and exit feature is making adjustments, you could lose control of the vehicle.

▶ Always wait until the adjustment process is complete before driving off.

⚠ **WARNING** Risk of becoming trapped while adjusting the easy entry and exit feature

When the easy entry and exit feature adjusts the steering wheel and the driver's seat, you and other vehicle occupants – particularly children – could become trapped.

▶ During the adjustment process of the easy entry and exit feature, make sure that no one has any body parts in the sweep of the seat or the steering wheel.

If there is a risk of becoming trapped by the steering wheel:

▶ Move the adjustment lever of the steering wheel.
The adjustment process is stopped.

If there is a risk of becoming trapped by the driver's seat:

▶ Press the seat adjustment switch.
The adjustment process is stopped.

Vehicles with memory function: You can stop the adjustment process by pressing one of the memory function position switches.

⚠ **WARNING** Risk of becoming trapped during activation of the easy entry and exit feature by children

If children activate the easy entry and exit feature, they can become trapped, particularly when unattended.

▶ Never leave children unattended in the vehicle.

▶ When leaving the vehicle, always take the SmartKey with you and lock the vehicle.

If the easy entry and exit feature is active, the steering wheel will move upwards and the driver's seat will move back in the following situations:

- You switch the ignition off with the driver's door open
- You open the driver's door with the ignition switched off

ⓘ The steering wheel will move upwards only if it is not already as high as it will go. The driver's seat will move backwards only if it is not already in the rearmost position.

The steering wheel and the driver's seat will move back to the last drive position in the following cases:

- You switch the power supply or the ignition on when the driver's door is closed
- You close the driver's door with the ignition switched on.

The last drive position will be stored when:

- You switch the ignition off.
- **Vehicles with memory function:** You call up the seat settings via the memory function.
- **Vehicles with memory function:** You save the seat settings via the memory function.

Vehicles with memory function: Press one of the memory function saved position buttons to stop the adjustment process.

Setting the easy entry and exit feature

Multimedia system:

→ Vehicle ▸▸ Vehicle Settings ▸▸ Easy Entry/Exit

▶ Select Steering Wheel & Seat, Steering Wheel Only or Off.

Operating the memory function

⚠ **WARNING** Risk of an accident if the memory function is used while driving

If you use the memory function on the driver's side while driving, you could lose control of the vehicle as a result of the adjustments being made.

▶ Only use the memory function on the driver's side when the vehicle is stationary.

⚠ **WARNING** Risk of entrapment when setting the seat with the memory function

When the memory function adjusts the seat or steering wheel, you and other vehicle occupants – particularly children – could become trapped.

▶ During the setting procedure of the memory function, ensure that no body parts are in the sweep of the seat or the steering wheel.

▶ If somebody becomes trapped, immediately release the memory function position button.
The adjustment process is stopped.

⚠ **WARNING** Risk of entrapment if the memory function is activated by children

Children could become trapped if they activate the memory function, particularly when unattended.

▶ Never leave children unattended in the vehicle.

▶ When leaving the vehicle, always take the SmartKey with you and lock the vehicle.

The memory function can be used when the ignition is switched off.

Storing

The memory function is only available in vehicles with the memory package.

Seat adjustments for up to three people can be stored and called up using the memory function.

The following settings can be stored for the front seats:

- Seat, backrest, head restraint position and contour of the seat backrest in the lumbar region
- Active multicontour seat: side bolsters of the seat backrest, shoulder of the seat backrest, contour of the seat backrest, dynamic function level
- Seat heating: distribution of the heated sections of the seat cushion and seat backrest
- Driver's side: steering wheel position and position of the outside mirrors on the driver's and front passenger sides
- Head-up Display

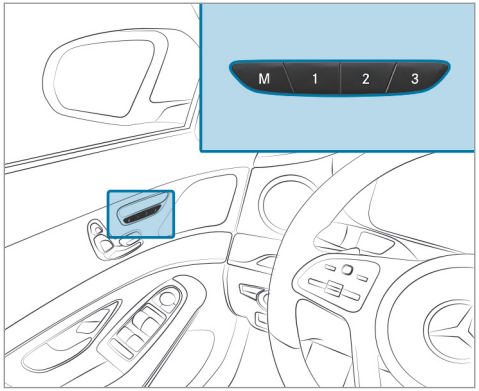

▶ Set the seat, the steering wheel, the Head-up Display and the outside mirror to the desired position.

▶ Briefly press memory button M and then press preset position button 1, 2 or 3 within three seconds.
An acoustic signal sounds. The settings are stored.

ⓘ Depending on the model, only preset position buttons 1 and 2 are available.

▶ **To call up:** press and hold the relevant preset position button 1, 2 or 3 until the front seat, the steering wheel, Head-up Display and outside mirror are in the stored position.

ⓘ Depending on the model, only preset position buttons 1 and 2 are available.

ⓘ If you release the preset position button, the seat, steering wheel and mirror setting functions stop immediately.
Vehicles with the Active Multicontour Seat Package: Setting the active multicontour seat or the 4-way lumbar support is still carried out.
Vehicles without the Active Multicontour Seat Package: Adjustment of the 4-way lumbar support is still carried out.

Memory function in the rear passenger compartment

Operating the rear seat via the memory function in the rear passenger compartment

Storing

Rear seat settings for up to three people can be stored and called up using the memory function in the rear passenger compartment.

The following settings can be stored for the rear seats:

- Position of the seat, backrest and head restraint
- Active multicontour seats: the seat side bolsters of the seat backrest as well as the contour of the seat backrest in the lumbar and shoulder regions
- Seat heating: distribution of the heated sections of the seat cushion and seat backrest

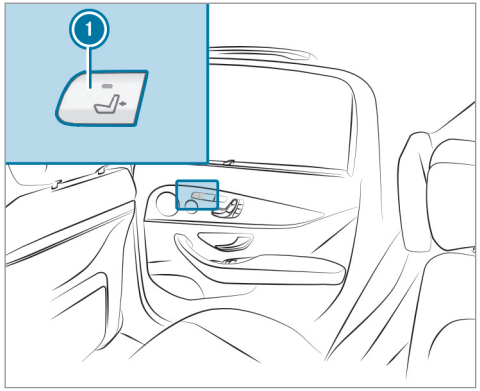

- Press button 1.
  The rear seat is selected if the indicator lamp in the button does not light up.
- Adjust the rear seat using the buttons in the door control panel (→ page 101).

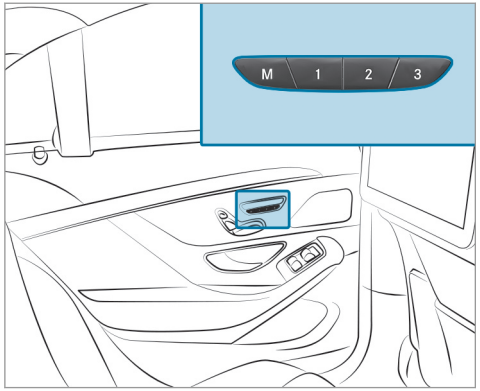

Example: vehicles without a reclining rear seat

- Briefly press memory button M and then press preset position button 1, 2 or 3 within three seconds.
  The settings for the rear seat are stored in the selected memory position.

ⓘ **Vehicles with reclining rear seat:** You cannot store any settings on the button for adjusting the reclined position.

Calling up

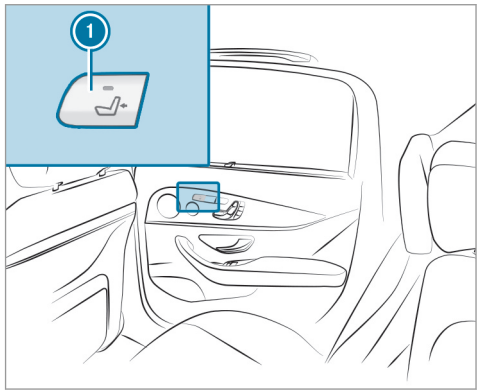

- Press button 1.
  The rear seat is selected if the indicator lamp in the button does not light up.

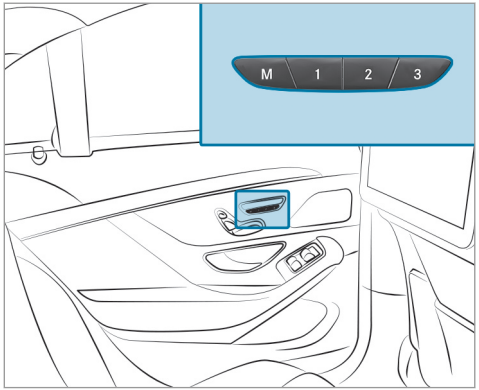

Example: vehicles without a reclining rear seat

▶ Press and hold the corresponding memory position switch 1, 2 or 3 until the rear seat is in the stored position.

ⓘ Seat adjustment is interrupted as soon as you release the preset position button. The adjustment of the active multicontour seat is still carried out.

Operating the front passenger seat and rear seats via the memory function in the rear passenger compartment

Requirements:

- For selecting the front passenger seat: the power supply is switched on

Storing

Front passenger seat adjustments and rear seat adjustments for up to three people can be stored and called up using the memory function in the rear passenger compartment.

The following settings can be stored for the front passenger seat:

- Position of the seat, backrest and head restraint

The following settings can be stored for the rear seats:

- Position of the seat, backrest and head restraint
- Active multicontour seats: the seat side bolsters of the seat backrest as well as the contour of the seat backrest in the lumbar and shoulder regions
- Seat heating: distribution of the heated sections of the seat cushion and seat backrest

The following settings are also stored to a memory position, if the indicator lamp in the button lights up:

- Position of the footrest of the front passenger seat, if available
- Position of the screen, if available

Using the preset position buttons, you always store the current setting of each seat.

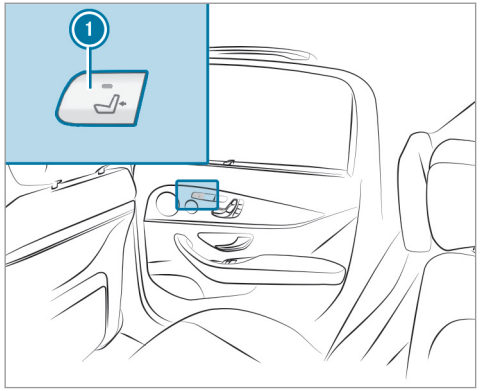

- Press button 1.
  The rear seat is selected if the indicator lamp in the button does not light up.
- Adjust the rear seat using the buttons in the door control panel (→ page 101).
- Press button 1.
  When the indicator lamp lights up, the front passenger seat is selected.
- Adjust the front passenger seat using the buttons on the door control panel in the rear passenger compartment (→ page 96).
- Ensure that the indicator lamp in button 1 lights up.

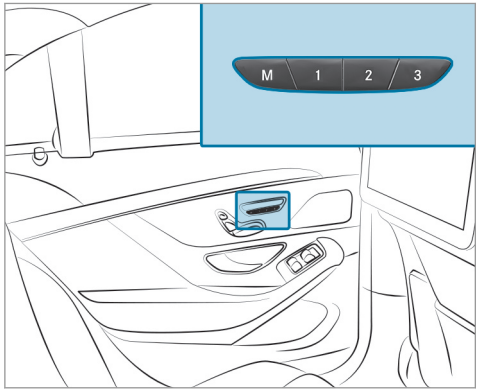

Example: vehicles without a reclining rear seat

- Briefly press memory button M and then press preset position button 1, 2 or 3 within three seconds.
  The settings for the front passenger seat and the rear seat are stored in the selected preset position.

ⓘ **Vehicles with reclining rear seat:** You cannot store any settings on the button for adjusting the reclined position.

Calling up

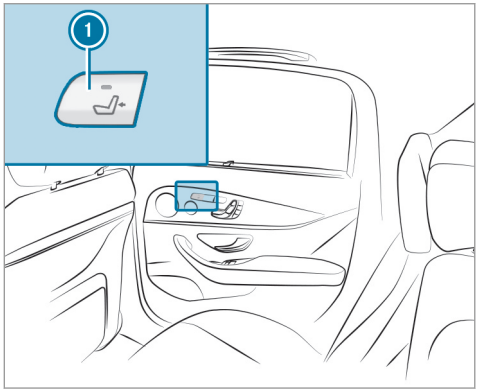

▶ Press button ①.
When the indicator lamp lights up, the front passenger seat is selected.

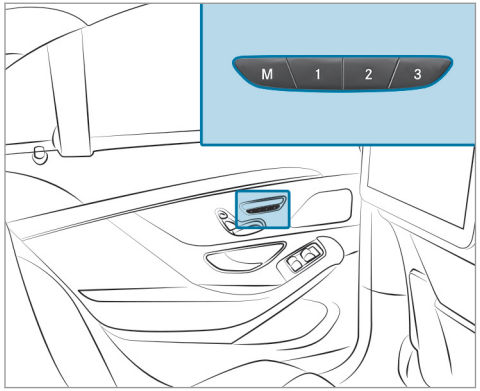

Example: vehicles without a reclining rear seat

▶ Press and hold the relevant preset position button 1, 2 or 3 until both seats are in the stored position.

ⓘ The preset positions in the area for the chauffeur mode can only be set when the conditions for the chauffeur mode are fulfilled .

ⓘ Seat adjustment is interrupted as soon as you release the preset position button. The adjustment of the active multicontour seat is still carried out.

ⓘ You can use the rear-compartment child safety lock to disable this function (→ page 63).

Stowage areas

Notes on loading the vehicle

⚠ **DANGER** Risk of exhaust gas poisoning

Combustion engines emit poisonous exhaust gases such as carbon monoxide. Exhaust gases can enter the vehicle interior if the trunk lid is open when the engine is running, especially if the vehicle is in motion.

▶ Always switch off the engine before opening the trunk lid.

▶ Never drive with the trunk lid open.

WARNING Risk of injury from unsecured items in the vehicle

If objects, luggage or loads are not secured or not secured sufficiently, they could slip, tip over or be thrown around and thereby hit vehicle occupants.

There is a risk of injury, particularly in the event of sudden braking or a sudden change in direction.

- ▶ Always stow objects in such a way that they cannot be thrown around.
- ▶ Before the journey, secure objects, luggage or loads against slipping or tipping over.

WARNING Risk of injury due to objects being stowed incorrectly

If you do not adequately stow objects in the vehicle interior, they could slip or be tossed around and thereby strike vehicle occupants. In addition, cup holders, open stowage spaces and mobile phone brackets cannot always restrain the objects they contain in the event of an accident.

There is a risk of injury, particularly in the event of sudden braking or a sudden change in direction.

- ▶ Always stow objects in such a way that they cannot be tossed about in these or similar situations.
- ▶ Always make sure that objects do not project from stowage spaces, parcel nets or stowage nets.
- ▶ Close the lockable stowage spaces before starting a journey.
- ▶ Always stow and secure objects that are heavy, hard, pointed, sharp-edged, fragile or too large in the trunk.

Observe the notes on the cup holders.

WARNING Risk of burns from the tailpipe and tailpipe trims

The exhaust tailpipe and tailpipe trims can become very hot. If you come into contact with these parts of the vehicle, you could burn yourself.

- ▶ Always be particularly careful around the tailpipe and the tailpipe trims and supervise children especially closely in this area.
- ▶ Allow vehicle parts to cool down before touching them.

The driving characteristics of your vehicle are dependent on the distribution of the load within the vehicle. You should bear the following in mind when loading the vehicle:

- Never exceed the permissible gross mass or the gross axle weight rating for the vehicle (including occupants). The values are specified on the vehicle identification plate on the vehicle's B-pillar.
- The load must not protrude above the upper edge of the seat backrests.
- Always place the load behind unoccupied seats if possible.

- Secure the load using the parcel net hooks. Distribute the load on the parcel net hooks evenly.

Stowage spaces in the vehicle interior

Overview of the front stowage compartments

WARNING Risk of injury due to objects being stowed incorrectly

If you do not adequately stow objects in the vehicle interior, they could slip or be tossed around and thereby strike vehicle occupants. In addition, cup holders, open stowage spaces and mobile phone brackets cannot always restrain the objects they contain in the event of an accident.

There is a risk of injury, particularly in the event of sudden braking or a sudden change in direction.

▶ Always stow objects in such a way that they cannot be tossed about in these or similar situations.

▶ Always make sure that objects do not project from stowage spaces, parcel nets or stowage nets.

▶ Close the lockable stowage spaces before starting a journey.

▶ Always stow and secure objects that are heavy, hard, pointed, sharp-edged, fragile or too large in the trunk.

Observe the notes on loading the vehicle.

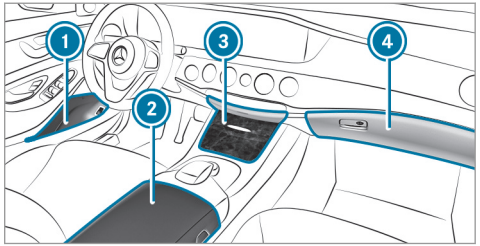

1. Stowage space in the doors
2. Stowage/telephone compartment in the armrest with multimedia and USB ports as well as stowage space, e.g. for an MP3 player
3. Stowage compartment in the front center console
4. Glove box

Locking/unlocking the glove box

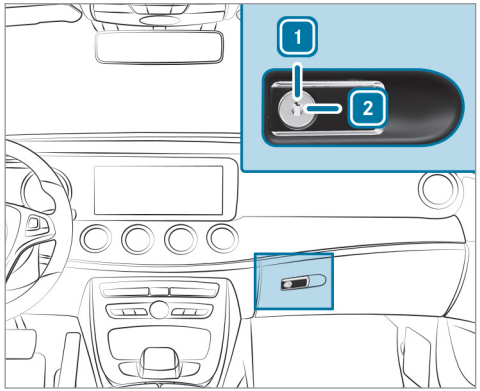

▶ Turn the emergency key a quarter turn clockwise [2] (to lock) or counter-clockwise [1] (to unlock).

Opening the eyeglasses compartment

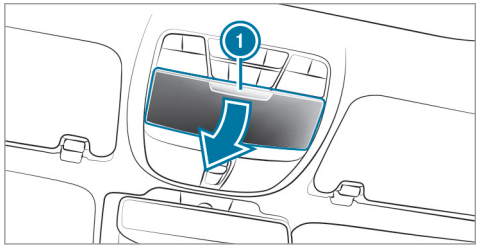

▶ Press button ①.

Folding the folding table out or in

⚠ WARNING Risk of injury from the open folding table

If you are driving with the folding table open, vehicle occupants could strike against it, in particular in the event of an accident, sudden braking or an abrupt change of direction.

▶ Close the folding table before each journey.

! NOTE Damage to the folding tables when moving the seats back

Open folding tables may be damaged when the seats are moved back.

▶ Make sure that the folding tables are folded in when moving the front seats back.

Folding out

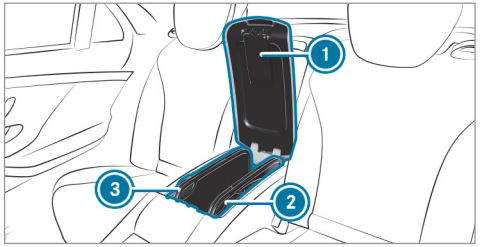

▶ Open rear arm rest ① (→ page 129).

▶ Pull the folding table forwards and upwards by recess ② or ③ and swing outwards.

▶ Fold the table panels apart.

▶ **To fold in:** fold the table panels together and swing in the folding table.

Opening the stowage compartment in the rear armrest

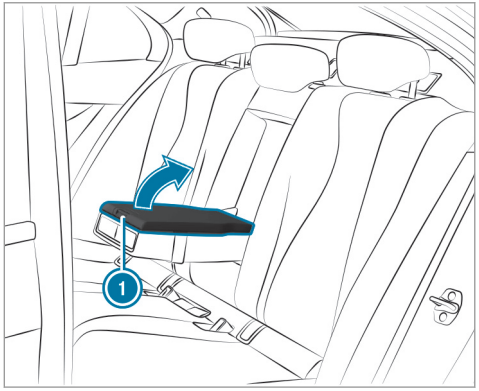

Vehicles with a rear bench seat

▶ Fold down the rear armrest.

▶ **To open:** press release catch ① and swing the cover of the armrest upwards.

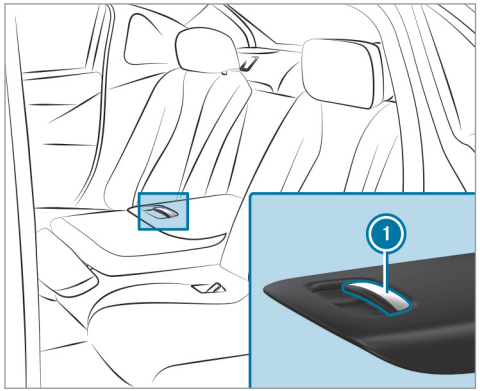

Vehicles with electrically adjustable outer seats

▶ Fold down the rear armrest.

▶ **To open:** pull handle ① and fold the cover of the armrest upwards.

Opening the stowage compartment in the rear-compartment center console

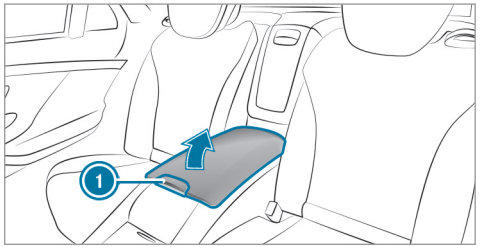

Vehicles with individual rear seats

▶ Pull handle ① and fold the cover of the armrest upwards.

Opening the stowage box in the backrest in the rear passenger compartment

! NOTE Damage to the rear armrest due to body weight

When folded out, the rear armrest can be damaged by body weight.

▶ Do not sit or support yourself on the rear seat armrest.

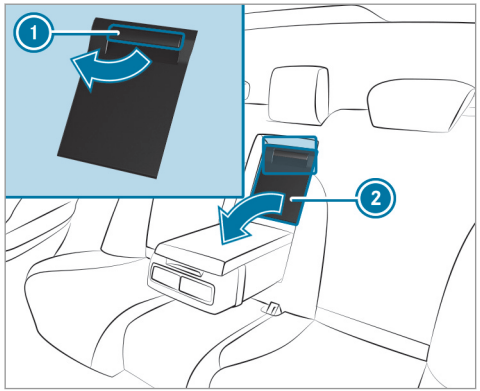

Example: Vehicles with a rear bench seat

▶ **Vehicles with rear bench seat or electrically adjustable outer seats:** Fold down the rear armrest.

▶ Pull handle ① and fold down cover ②.

Overview of the parcel net hooks

Observe the following notes:

- Secure the load using the parcel net hooks.
- Do not use elastic straps or nets to secure a load. These are intended only as anti-slip protection for light loads.
- Do not route tie downs across sharp edges or corners.
- Pad sharp edges for protection.

There are up to four parcel net hooks in the trunk depending on the equipment installed.

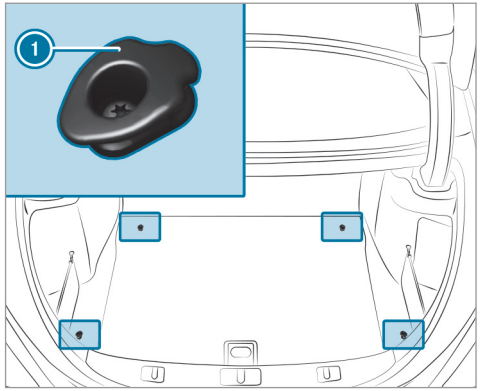

① Parcel net hooks

EASY-PACK trunk box

Adjusting the height of the EASY-PACK trunk box to any position

⚠ **WARNING** Risk of becoming trapped and injured when moving the floor up

When the floor moves up, your hands may become trapped on the frame of the EASY-PACK trunk box and objects may be thrown up.

- ▶ When the floor moves up, make sure that your hands are not within the sweep of the floor.
- ▶ If someone becomes trapped, carefully push the center of the floor downward.
- ▶ Remove all objects from the floor before moving it up.

⚠ **WARNING** Risk of becoming trapped when pressing the EASY-PACK trunk box in

When the EASY-PACK trunk box is pressed into the retracted position, your hands may become trapped. Children, in particular, may injure themselves when doing so.

- ▶ When pressing the EASY-PACK trunk box in, make sure that your hands are not within the sweep of the EASY-PACK trunk box.
- ▶ When leaving the vehicle, always take the SmartKey with you and lock the vehicle.
- ▶ Never leave children unattended in the vehicle.

! **NOTE** Damage to the extended EASY-PACK trunk box

The EASY-PACK trunk box may be damaged when it is extended.

- ▶ Do not place any objects on or press down on the EASY-PACK trunk box frame.
- ▶ Do not close the trunk lid when the EASY-PACK trunk box is extended.

! **NOTE** Damage to the EASY-PACK trunk box by objects

Objects that are sharp-edged, pointed, fragile, rounded or heavy and objects that roll can damage the EASY-PACK trunk box and be thrown out.

- ▶ Do not transport objects that are sharp-edged, pointed, rounded or fragile and objects that roll in the EASY-PACK trunk box.
- ▶ Always stow and secure such objects outside of the box in the trunk.
- ▶ Always observe the maximum permitted load of the EASY-PACK trunk box.
- ▶ Do not use the EASY-PACK trunk box when the rear seats are folded forwards.

The maximum permitted load of the EASY-PACK trunk box is 22 lbs (10 kg). To prevent the box from being overloaded, the box floor will lower onto the trunk floor when the load reaches approximately 11 lbs (5 kg).

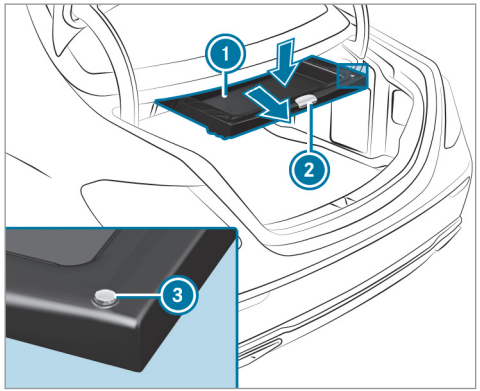

▶ **To remove:** pull handle ② on the box.

▶ **To increase the load capacity:** press the center of floor ① downwards to the desired position and box size.

▶ **To reduce the load capacity:** press button ③.

▶ **To stow:** press the box in completely using handle ② until it locks in place.

ⓘ Observe the notes on cleaning the EASY-PACK trunk box (→ page 422).

Installing or removing the EASY-PACK trunk box

Installing

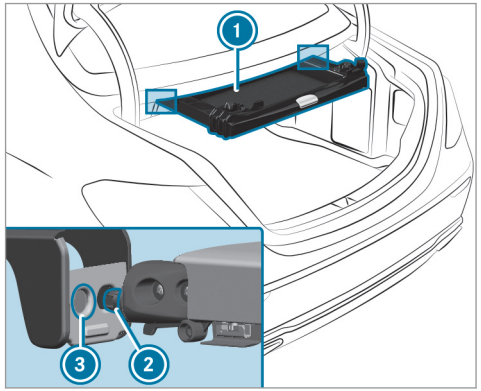

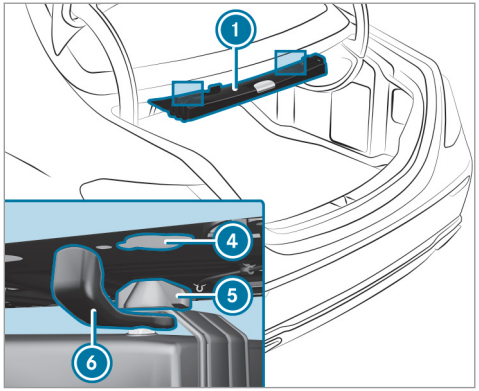

- Turn rotating catches 6 outward.
- Insert retainers 2 of box 1 into outer holes 3.
- Raise box 1 and press hooks 5 into the anchorages of rear shelf 4.
- Turn rotating catches 6 inward.

Removing

- Turn rotating catches 6 outward.
- Lower box 1 and pull it out of anchorages in rear shelf 4.
- Pull box 1 back out of openings 3.

Opening the stowage space under the trunk floor

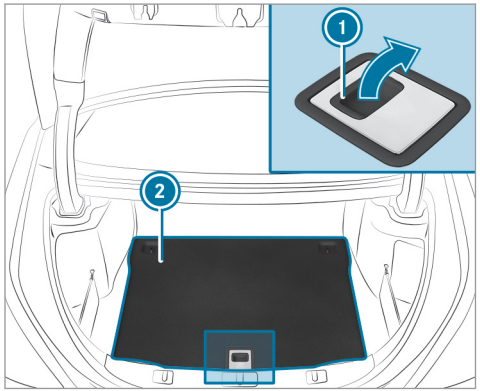

- Pull trunk floor 2 upwards using handle 1 until it rests against the trunk partition.

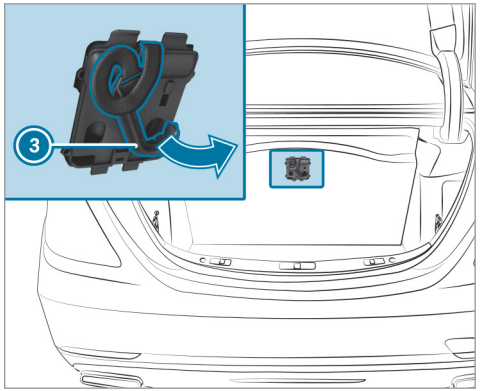

- Fold out hook 3 on the underside of the trunk floor.

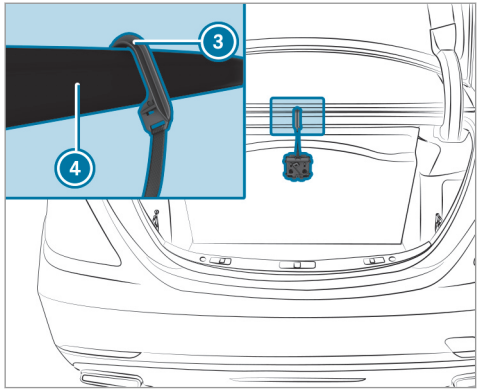

▶ Clip hook ③ onto drip rail ④.

Attaching a roof rack

⚠ **WARNING** Risk of injury if the maximum roof load is exceeded

When you load the roof, the center of gravity of the vehicle rises and the usual driving characteristics as well as the steering and braking characteristics change. During cornering, the vehicle tilts more strongly and may react more sluggishly to steering movements.

If you exceed the maximum roof load, the driving characteristics, as well as the steering and braking characteristics, will be greatly impaired.

▶ Always comply with the maximum roof load and adjust your driving style.

You will find information on the maximum roof load in the "Technical data" section.

! **NOTE** Vehicle damage from non-approved roof racks

The vehicle could be damaged by roof racks which have not been tested and approved by Mercedes-Benz.

▶ Use only roof racks tested and approved for Mercedes-Benz.

▶ Depending on the vehicle equipment, ensure that when the roof rack is installed, the sliding sunroof can be fully raised.

▶ Depending on the vehicle equipment, ensure that when the roof rack is installed, the trunk lid can be fully opened.

▶ Position the load on the roof rack in such a way that the vehicle will not sustain damage even when it is in motion.

! **NOTE** Damage to the sliding sunroof when a roof rack is installed

The sliding sunroof may be damaged by the roof rack if you attempt to open it when the roof rack is installed.

▶ Do not open the sliding sunroof when the roof rack is installed.

In order to allow ventilation of the vehicle interior, you can raise the sliding sunroof.

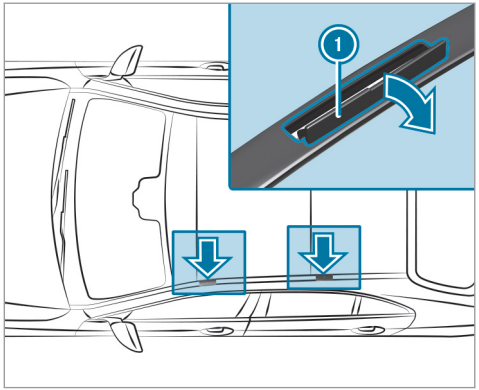

NOTE Damage to the covers

The covers may be damaged and scratched when being opened.

▶ Do not use metallic or hard objects.

▶ Carefully fold covers (1) upwards in the direction of the arrow.

▶ Secure the roof rack to the anchorage points under covers (1).

▶ Comply with the roof rack manufacturer's installation instructions.

▶ Secure the load on the roof rack.

Cup holder

Installing the cup holder in or removing it from the center console

WARNING - Risk of accident or injury when using the cup holder while the vehicle is moving

The cup holder cannot secure containers while the vehicle is moving.

If you use a cup holder while the vehicle is moving, the container may be flung around and liquids may be spilled. The vehicle occupants may come into contact with the liquid and if it is hot, they could be scalded. You could be distracted from traffic conditions and you may lose control of the vehicle.

▶ Only use the cup holder when the vehicle is stationary.

▶ Only use the cup holder for containers of the right size.

▶ Close the container, particularly if the liquid is hot.

Observe the following for Mercedes-Maybach vehicles equipped with champagne flutes:

- do not use the champagne flutes while the vehicle is in motion
- do not use champagne flutes made of breakable glass, and store them in the trunk if possible

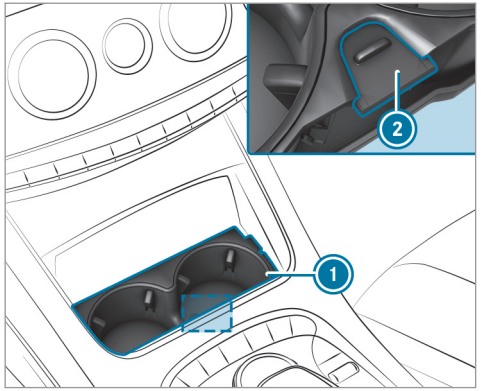

▶ **To remove:** slide catch ② forwards and pull out cup holder ①.

▶ **To install:** insert cup holder ① and slide back catch ②.

ⓘ The cup holder rubber mat can be removed for cleaning, e.g. using clean, lukewarm water.

ⓘ Observe the notes on loading the vehicle (→ page 125).

Opening the cup holders in the rear armrest (vehicles with rear bench seat)

! NOTE Damage to the cup holder

When the rear armrest is folded back the cup holder could become damaged.

▶ Only fold the rear armrest back when the cup holder is closed.

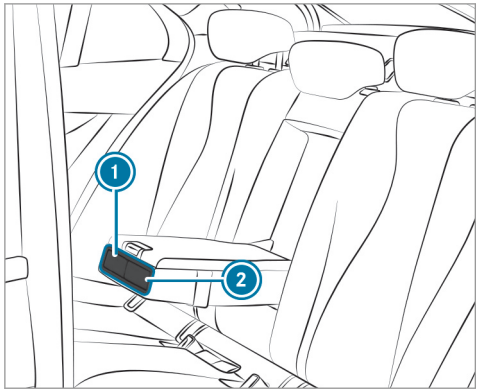

▶ **To open:** press cup holder ① or ②.

▶ Place a container in or remove a container from cup holder ① or ②.

Opening or closing the cup holder in the rear armrest (vehicles with electrically adjustable rear seats)

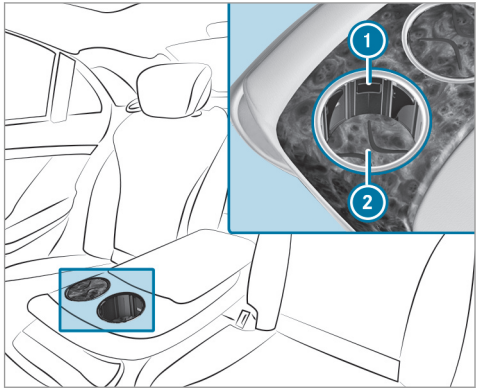

- **To open:** press down cup holder base ② in the middle until it engages.
- **To close:** press closing button ①.

ⓘ The cup holder insert can be removed for cleaning, e.g. using clean, lukewarm water.

Removing and installing the cup holder insert in the rear armrest (vehicles with electrically adjustable rear seats)

Removing the insert

! NOTE Damage to the wooden trim

The wooden trim can be damaged by pulling out the cup holder insert.

- Do not pull the cup holder insert out from the rear armrest any farther than 0.6 in (15 mm).

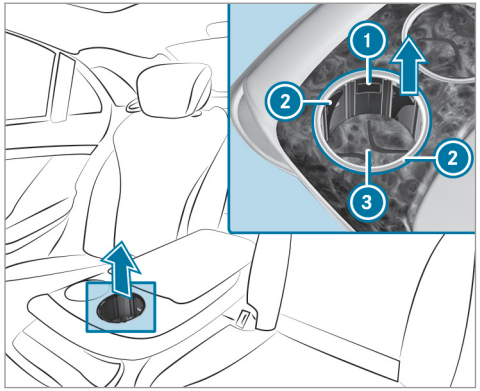

- Press down cup holder base ③ in the middle until it engages.
- Press both retaining clips ② and pull the cup holder insert upwards approximately 0.6 in (15 mm).
- Press button ①.
  Cup holder base ③ raises.
- Remove the insert from the rear armrest completely.

Installing the insert

! NOTE Damage to the wooden trim

The wooden trim can be damaged by inserting the cup holder insert.

- Make sure that the cup holder insert has been inserted into the recess correctly.

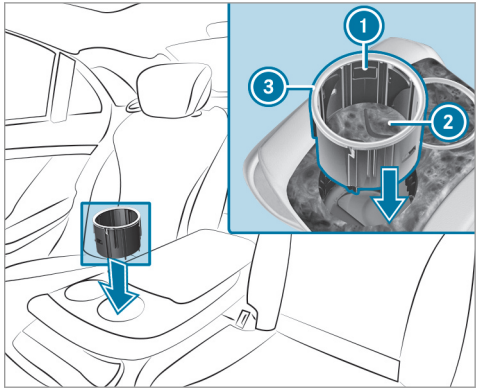

- Make sure that cup holder base ② is in the upper position.
- Place the cup holder insert into the recess in the rear armrest such that button ① is facing forwards.
- Press the cup holder insert down.
- Press outer ring ③ of the cup holder insert until the cup holder insert engages audibly.

Switching the cooling or heating function for the temperature-controlled cup holder on and off

When the heating function is used, the metal insert of the cup holder will be heated. For this reason, you must not reach into the cup holder insert.

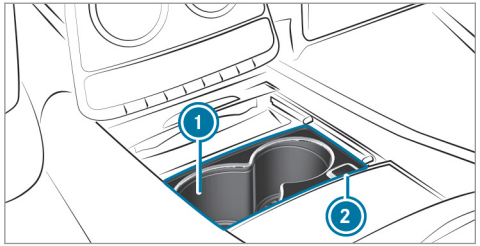

- **To switch on:** press button ② repeatedly until the blue (keep cool) or red (keep warm) indicator lamp on the button lights up.
- **To switch off:** press button ② repeatedly until the indicator lamp on the button goes out.

ⓘ Clean the removable rubber mat only with clear, lukewarm water, and clean cup holder ① only with a soft cloth.

Ashtray and cigarette lighter

Using the ashtray in the front center console

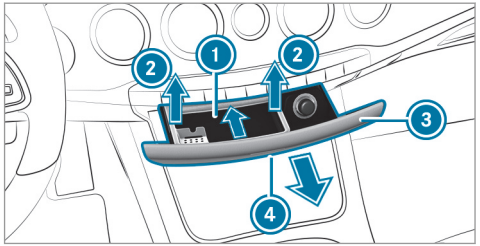

- **To open:** briefly press the marking ④.
- **To remove the insert:** grip the sides of insert ①, push it forward and pull it out upwards ②.
- **To re-install the insert:** press insert ① into the drawer until it engages.
- **To close:** press stowage compartment ③ closed until it locks.

Using the ashtray in the rear door

To use the ashtray, you can place it in a cup holder or hold it in your hand.

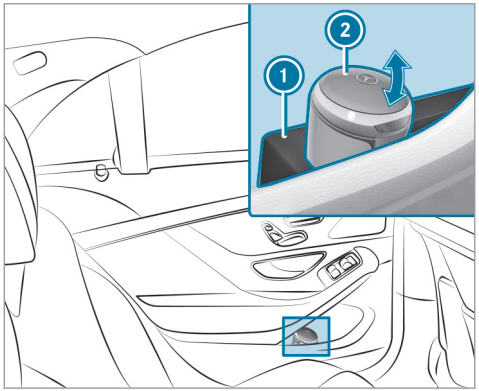

▶ Fold cap ② upwards.

If you are not using the ashtray, close it and place it in holder ① in the rear door.

Using the cigarette lighter in the front center console

⚠ **WARNING** - Risk of fire and injury from hot cigarette lighter

You can burn yourself if you touch the hot heating element or the socket of the cigarette lighter.

In addition, flammable materials may ignite if:

- you drop the hot cigarette lighter
- a child holds the hot cigarette lighter to objects, for example

▶ Always hold the cigarette lighter by the knob.

▶ Always make sure that the cigarette lighter is out of reach of children.

▶ Never leave children unattended in the vehicle.

Requirements:

- The ignition is switched on.

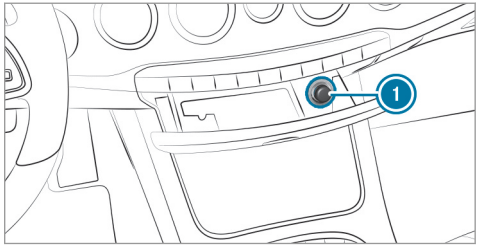

▶ Press in cigarette lighter ①.
The cigarette lighter will pop out automatically when the heating element is red-hot.

Using the cigarette lighter in the rear passenger compartment

Requirements:

- The ignition is switched on.

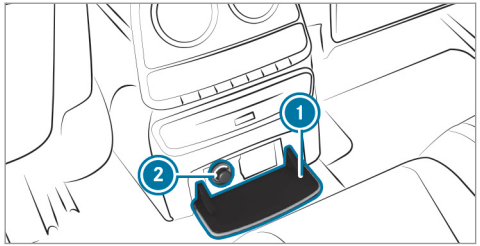

Vehicles with a rear bench seat or electrically adjustable outer seats

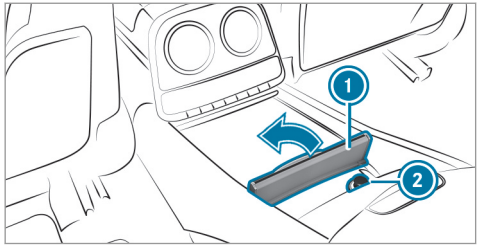

Vehicles with individual rear seats

- ▶ Lightly press cover ①.
- ▶ Press in cigarette lighter ②.
  The cigarette lighter will pop out automatically when the heating element is red-hot.

Sockets

Using the 12 V socket in the rear passenger compartment

Requirements:

- Only connect devices up to a maximum of 180 watts (15 A).

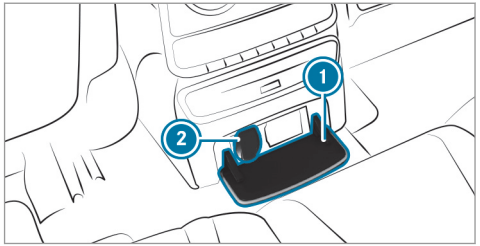

Vehicles with a rear bench seat or electrically adjustable outer seats

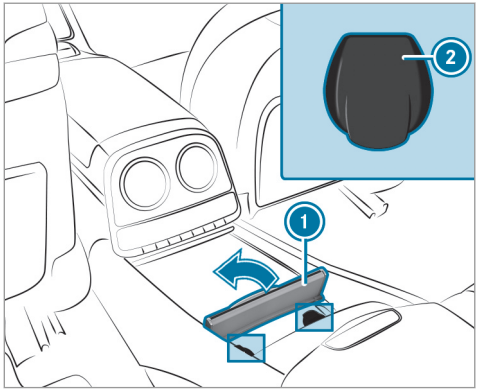

Vehicles with individual rear seats

- ▶ Lightly press cover ①.
- ▶ Fold up the cap of socket ②.
- ▶ Insert the plug of the device.

If you have connected a device to the 12 V socket, leave the cover of the stowage compartment open.

Using the 115 V socket in the rear passenger compartment

⚠ **DANGER** Risk of fatal injury due to damaged connecting cables or sockets

If a suitable device is connected, the 115 V socket will be carrying a high voltage. If the connecting cable or the 115 V socket is pulled out of the trim or is damaged or wet, you could receive an electric shock.

- ▶ Only use dry and damage-free connecting cables.
- ▶ When the ignition is switched off, ensure that the 115 V socket is dry.
- ▶ If the 115 V socket is damaged or gets pulled out of the paneling, immediately have the socket checked or replaced at a qualified specialized workshop.
- ▶ Never plug the connecting cable into a 115 V socket that is damaged or has been pulled out of the trim.

⚠ **DANGER** Risk of fatal injury due to incorrect handling of the socket

You could receive an electric shock:

- if you reach into the socket.
- if you insert unsuitable devices or objects into the socket.

- ▶ Do not reach into the socket.
- ▶ Only connect suitable devices to the socket.

Requirements:

- Only connect devices with a suitable plug which conforms to the standards specific to the country you are in.
- Only connect devices up to a maximum of 150 watts.
- Do not use multiple socket outlets.

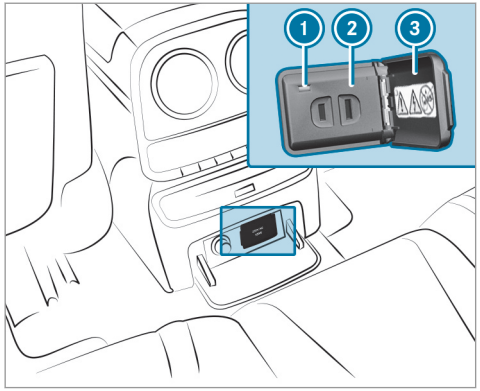

Vehicles with a rear bench seat or electrically adjustable outer seats

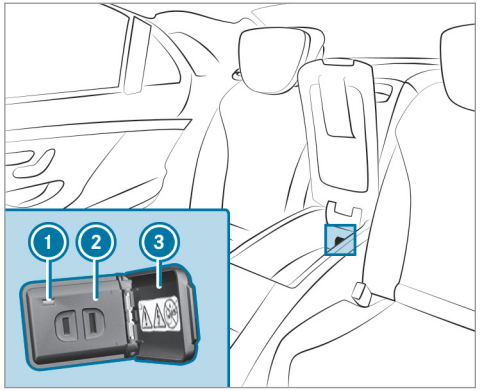

Vehicles with individual rear seats

- ▶ Open flap ③.
- ▶ Insert the plug of the device into 115 V socket ②.
  When the on-board electrical system voltage is sufficient, indicator lamp ① lights up.

Using the 12 V socket in the trunk

Requirements:

- Only connect devices up to a maximum of 180 watts (15 A).

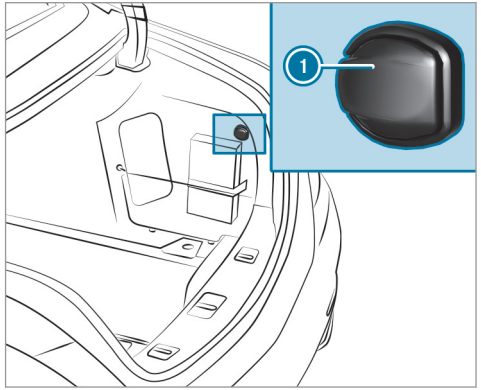

- ▶ Lift up socket cap ①.
- ▶ Insert the plug of the device.

USB port in the rear passenger compartment

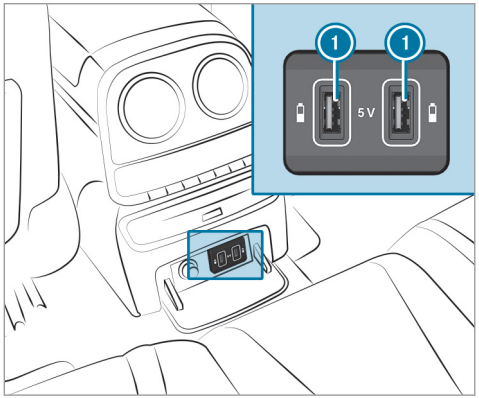

Vehicles with a rear bench seat or electrically adjustable outer seats

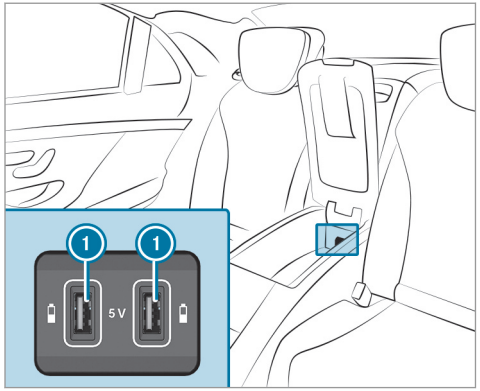

Vehicles with individual rear seats

You can charge a USB device, e.g. a mobile phone, at USB ports (1) using a suitable charging cable. The devices can be charged with 5 V (2.1 A) and when the ignition is switched on.

Refrigerator box

Using the refrigerator box

WARNING Risk of fire due to a covered vent grille on the refrigerator box

If you cover the vent grille for the refrigerator box, it may overheat.

▶ Always make sure that the vent grille is not covered.

The ventilation grille for the refrigerator box is in the trunk.
The refrigerator box can bear a maximum load of 7.7 lb (3.5 kg).

Store only plastic bottles in the upper compartment of the refrigerator box. The contents of the bottle must be no more than 17 fl. oz. (0.5 l).

If you do not need to use the refrigerator box for an extended period you should switch it off, defrost it and clean it. After doing so, leave the lid open for a time.

The refrigerator box will reduce its cooling capacity or switch off in the following cases:

- too many electrical consumers are turned on
- the starter battery is not sufficiently charged

If this is the case, the indicator lamps will flash on the button for switching the refrigerator box on and off. The cooling function will automatically switch back on as soon as there is sufficient voltage.

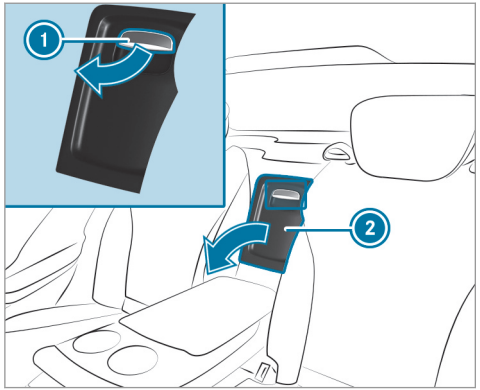

▶ Vehicles with a rear bench seat or electrically adjustable outer seats: fold down the rear armrest.

▶ Pull handle ① and fold down cover ②.

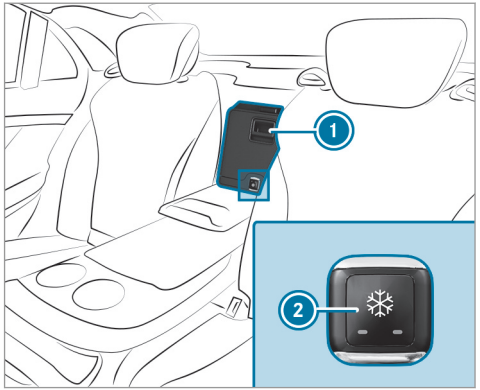

▶ **To open:** pull handle ① and fold down the cover.

▶ **To switch on:** press button ② repeatedly until an indicator lamp (low cooling) flashes or two indicator lamps (high cooling) flash.

▶ **To switch off:** press button ② repeatedly until both indicator lamps go out.

Removing or installing the refrigerator box

Removing

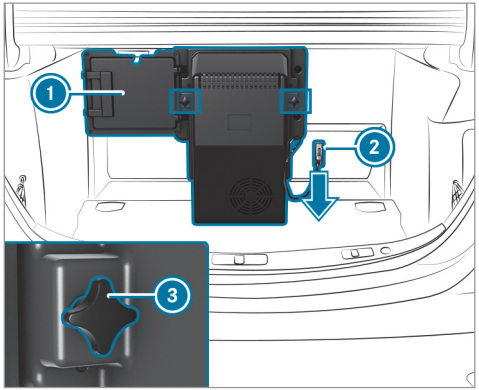

- Switch off the refrigerator box.
- Pull plug 2 down and out.
- Unscrew both screws 3.
- Pull out the refrigerator box.
- Close flap 1.

Installing

- Swing flap 1 to the side until it is locked in place by the magnet.
- Insert the refrigerator box.
- Tighten both screws 3.
- Connect plug 2.

Wireless charging of the mobile phone and connection with the exterior antenna

Notes on wireless charging of the mobile phone

WARNING Risk of injury due to objects being stowed incorrectly

If you do not adequately stow objects in the vehicle interior, they could slip or be tossed around and thereby strike vehicle occupants. In addition, cup holders, open stowage spaces and mobile phone brackets cannot always restrain the objects they contain in the event of an accident.

There is a risk of injury, particularly in the event of sudden braking or a sudden change in direction.

- Always stow objects in such a way that they cannot be tossed about in these or similar situations.
- Always make sure that objects do not project from stowage spaces, parcel nets or stowage nets.
- Close the lockable stowage spaces before starting a journey.
- Always stow and secure objects that are heavy, hard, pointed, sharp-edged, fragile or too large in the trunk.

Observe the notes on loading the vehicle.

WARNING Risk of fire from placing objects in the mobile phone stowage compartment

There is a risk of fire, in particular, if you place more than one mobile phone in the mobile phone stowage compartment.

▶ Apart from a mobile phone, do not place any other objects in the mobile phone stowage compartment, especially those made of metal.

NOTE Damage to objects caused by placing them in the mobile phone stowage compartment

If objects are placed in the mobile phone stowage compartment, they may be damaged by electromagnetic fields.

▶ Do not place credit cards, storage media or other objects sensitive to electromagnetic fields in the mobile phone stowage compartment.

NOTE Damage to the mobile phone stowage compartment caused by liquids

If liquids enter the mobile phone stowage compartment, the compartment may be damaged.

▶ Ensure that no liquids enter the mobile phone stowage compartment.

- Depending on the vehicle equipment, the mobile phone is connected to the vehicle's exterior antenna via the charging module.
- The charging function and wireless connection of the mobile phone to the vehicle's exterior antenna are only available if the ignition is switched on.
- Small mobile phones may not be able to be charged in every position of the mobile phone stowage compartment.
- Large mobile phones which do not rest flat in the mobile phone stowage compartment may not be able to be charged or connected with the vehicle's exterior antenna.
- The mobile phone may heat up during the charging process. This depends on the applications (apps) currently running.
- To ensure more efficient charging and connection with the vehicle's exterior antenna, remove the protective cover from the mobile phone. Protective covers which are designed for wireless charging are excluded.
- When charging, the mat should be used if possible.

Wireless charging of the mobile phone in the front

Requirements:

- The mobile phone must be suitable for wireless charging (Qi-compatible mobile phone). You can find a list of Qi-compatible mobile phones at:

  http://www.mercedes-benz.com/connect

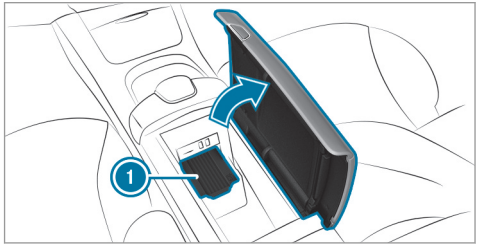

Example: vehicles without a rear passenger compartment air conditioning system

▶ Place the mobile phone as close to the center of mat ① as possible with the display facing upwards.
When the charging symbol is shown in the multimedia system, the mobile phone is being charged.

Malfunctions during the charging process are shown in the multimedia system display.

ⓘ The mat can be removed for cleaning, e.g. using clean, lukewarm water.

Wireless charging of a mobile phone in the rear compartment

Requirements:

- The mobile phone must be suitable for wireless charging (Qi-compatible mobile phone). You can find a list of Qi-compatible mobile phones at:

  http://www.mercedes-benz.com/connect

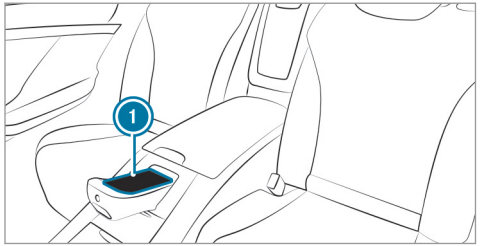

Example: vehicles with individual rear seats

▶ Place the mobile phone as close to the center of mat ① as possible with the display facing upwards.
When the indicator lamp at the front of the mobile phone system lights up, the mobile phone is being charged.

ⓘ The mat can be removed for cleaning, e.g. using clean, lukewarm water.

ⓘ Observe the notes on loading the vehicle (→ page 125).

Installing and removing the floor mats

⚠ **WARNING** Risk of accident due to objects in the driver's footwell

Objects in the driver's footwell may impede pedal travel or block a depressed pedal.

This jeopardizes the operating and road safety of the vehicle.

▶ Stow all objects in the vehicle securely so that they cannot get into the driver's footwell.

▶ Always install the floor mats securely and as prescribed in order to ensure that there is always sufficient room for the pedals.

▶ Do not use loose floor mats and do not place floor mats on top of one another.

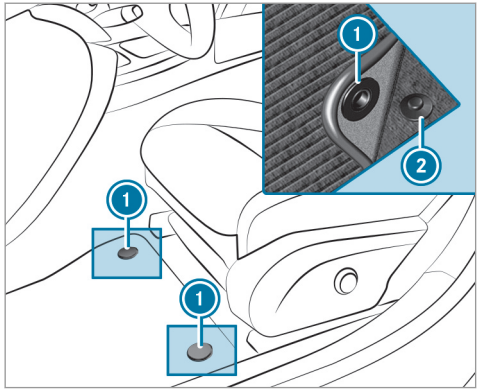

- **To install:** press studs ① onto holders ②.
- **To remove:** pull the floor mat off holders ②.

Installing/removing the pennant staff

Installing

The pennant staff is installed and removed in identical fashion on both the driver's and front-passenger sides.

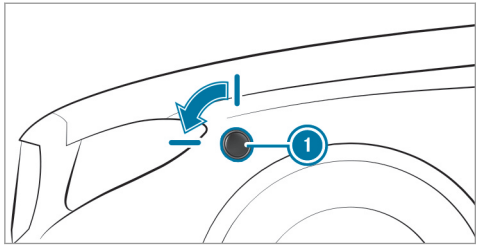

- Press cover ① and turn it forwards in the direction of travel.
- Remove the cover.

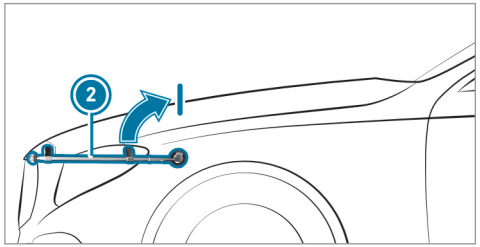

- Position pennant staff ② horizontally in the opening and press it in.
- Turn pennant staff ② in the opposite direction to the direction of travel until it is in a vertical position and engages.

Removing

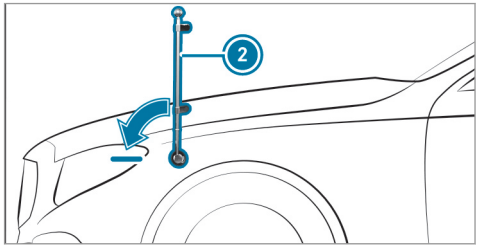

- Press pennant staff ② into the opening and turn it forwards in the direction of travel until it is in a horizontal position.
- Remove pennant staff ②.

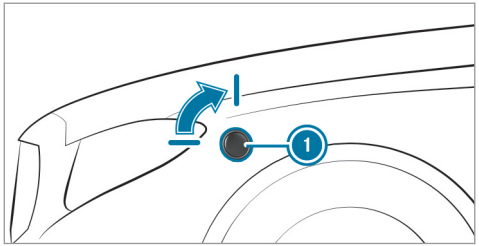

▶ Install cover (1) and turn it backwards in the opposite direction to the direction of travel.

The pennant staff can be stowed in the parcel nets in the trunk, for example.

Exterior lighting

Information about lighting systems and your responsibility

The various lighting systems of the vehicle are only aids. The driver of the vehicle is responsible for correct vehicle illumination in accordance with the prevailing light and visibility conditions, legal requirements and traffic situation.

Light switch

Operating the light switch

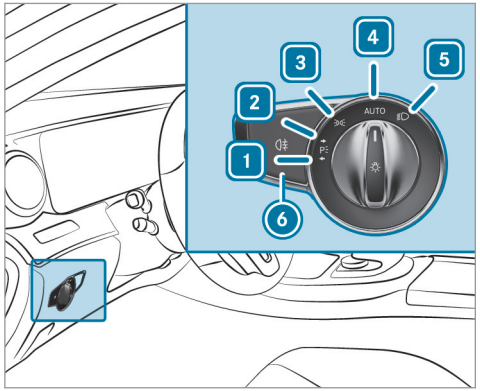

1 Left-hand standing lamps
2 Right-hand standing lamps
3 Parking lamps and license plate lamp
4 AUTO Automatic driving lights (preferred light switch position)
5 Low beam/high beam
6 Switches the rear fog light on/off

When low beam is activated, the parking lamps indicator lamp is deactivated and replaced by the low beam indicator lamp.

▶ Always park your vehicle safely using sufficient lighting, in accordance with the relevant legal stipulations.

! NOTE Battery discharging by operating the standing lights

Operating the standing lights over a period of hours puts a strain on the battery.

▶ Where possible, switch on the right or left parking light.

In the event of severe battery discharging, the standing lamps or parking lamps are automatically switched off to facilitate the next engine start.

The exterior lighting (except standing and parking lamps) will switch off automatically when the driver's door is opened.

- Observe the notes on surround lighting (→ page 155).

Automatic driving lights function
The parking lamps, low beam and daytime running lamps will be switched on automatically depending on the ignition status and the ambient light.

> ⚠ **WARNING** Risk of accident when the low beam is switched off in poor visibility
>
> When the light switch is set to AUTO, the low beam may not be switched on automatically if there is fog, snow or other causes of poor visibility such as spray.
>
> ▶ In such cases, turn the light switch to ≡D.

The automatic driving lights are only an aid. You are responsible for vehicle lighting.

Switching the rear fog lights on or off
Requirements:

- The light switch is in the ≡D or AUTO position.

▶ Press the 0⇶ button.

Please observe the country-specific laws on the use of rear fog lamps.

Operating the combination switch for the lights

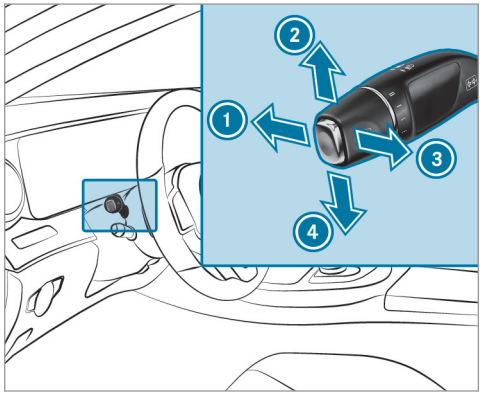

1. High beam
2. Turn signal light, right
3. High-beam flasher
4. Turn signal light, left

▶ Use the combination switch to activate the desired function.

High beam

- **To switch on:** turn the light switch to the [≡D] or [AUTO] position.
- Push the combination switch beyond the point of resistance in the direction of arrow ①.
  When the high beam is activated, the [≡D] low beam indicator lamp will be deactivated and replaced by the [≡D] high beam indicator lamp.
- **To switch off:** move the combination switch back to its starting position.

High-beam flasher

- Pull the combination switch in the direction of arrow ③.

Turn signal light

- **To indicate briefly:** push the combination switch briefly to the point of resistance in the direction of arrow ② or ④.
  The corresponding turn signal light will flash three times.
- **To indicate permanently:** push the combination switch beyond the point of resistance in the direction of arrow ② or ④.

Vehicles with Active Lane Change Assist:

- Indicator operation activated by the driver can extend for the duration of the lane change.
- If the driver indicated directly beforehand but a lane change was not immediately possible, the turn signal indicator may activate automatically.

Activating/deactivating the hazard warning lights

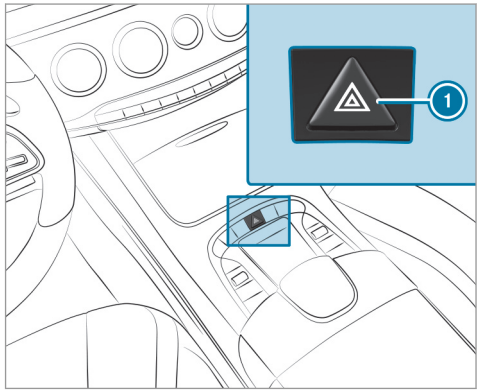

- Press button ①.

The hazard warning lights will switch on automatically if:

- The airbag has been deployed.

Cornering light

Cornering light function

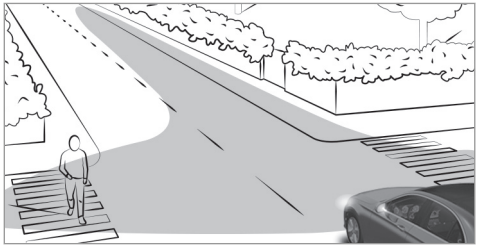

The cornering light function improves the illumination of the roadway over a wide angle in the turning direction, enabling better visibility on tight bends, for example. It can be activated only when the low beam is switched on.

The function is active in the following cases:

- At speeds below 25 mph (40 km/h) when the turn signal indicator is switched on or the steering wheel is turned
- At speeds between 25 mph (40 km/h) and 45 mph (70 km/h) when the steering wheel is turned

Traffic circle and intersection function: the cornering light will be activated on both sides based on an evaluation of the current GPS position of the vehicle. It will remain active until after the vehicle has left the traffic circle or the intersection.

Adaptive Highbeam Assist

Adaptive Highbeam Assist function

⚠ **WARNING** Risk of accident despite Adaptive Highbeam Assist

Adaptive Highbeam Assist does not recognize the following road users:

- Road users without lights, e.g. pedestrians
- Road users with poor lighting, e.g. cyclists
- Road users whose lighting is obstructed, e.g. by a barrier

On very rare occasions, Adaptive Highbeam Assist may fail to recognize other road users with their own lighting, or may recognize them too late.

In these or similar situations, the automatic high beam is not deactivated or is activated despite the presence of other road users.

▶ Always observe the traffic carefully and switch off the high beam in good time.

Adaptive Highbeam Assist cannot take into account road, weather or traffic conditions.

Detection may be restricted in the following cases:

- In poor visibility, e.g. fog, heavy rain or snow
- If there is dirt on the sensors or the sensors are obscured

Adaptive Highbeam Assist is only an aid. You are responsible for adjusting the vehicle's lighting to the prevailing light, visibility and traffic conditions.

ⓘ Adaptive Highbeam Assist is available only in vehicles with LED high performance headlamps.

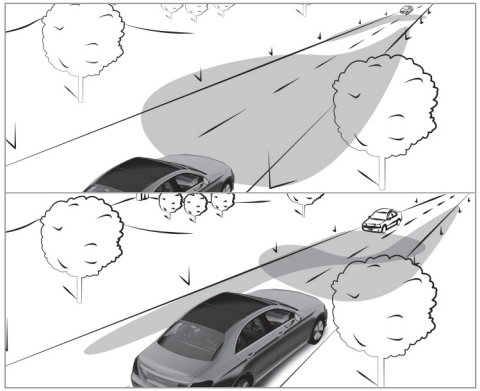

The Adaptive Highbeam Assist automatically switches between the following types of light:

- Low-beam headlamps
- High-beam headlamps

At speeds greater than 19 mph (30 km/h):

- If no other road users are detected, the high beam will be switched on automatically.

The high beam switches off automatically in the following cases:

- At speeds below 16 mph (25 km/h).
- If other road users are detected.
- If street lighting is sufficient.

At speeds greater than approximately 31 mph (50 km/h):

- The headlamp range of the low beam is regulated automatically based on the distance to other road users.

The system's optical sensor is located behind the windshield near the overhead control panel.

Switching Adaptive Highbeam Assist on/off

▶ **To switch on:** turn the light switch to the AUTO position.

▶ Switch on the high beam using the combination switch.
When the high beam is switched on automatically in the dark, the indicator lamp on the multifunction display comes on.

▶ **To switch off:** switch off the high beam using the combination switch.

Switching the daytime running lamps on/off

Multimedia system:

Vehicle ▸▸ Light Settings ▸▸ Daytime Run. Lights

▶ Activate ☑ or deactivate ☐ the function.

Setting the exterior lighting switch-off delay time

Multimedia system:

Vehicle ▸▸ Light Settings ▸▸ Ext. Light Switch Off

▶ Set the switch-off delay time.

Setting the surround lighting

Multimedia system:

→ Vehicle ▸▸ Light Settings ▸▸ Locator Lighting

▶ Activate ☑ or deactivate ☐ the function.

If the surround lighting is switched on, the exterior lighting remains lit for 40 seconds after the vehicle is unlocked. When you start the vehicle, the surround lighting is deactivated and the automatic driving lights are activated.

Interior lighting

Adjusting the interior lighting

Front overhead control panel

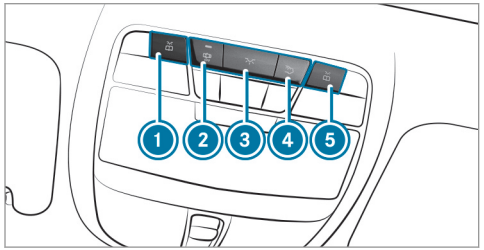

▶ ① Switches the front left-hand reading lamp on/off

▶ ② Switches the automatic interior lighting control on/off

▶ ③ Switches the front interior lighting on/off

▶ ④ Switches the rear interior heating on/off

▶ ⑤ Switches the front right-hand reading lamp on/off

Control panel inside the grab handle (rear passenger compartment)

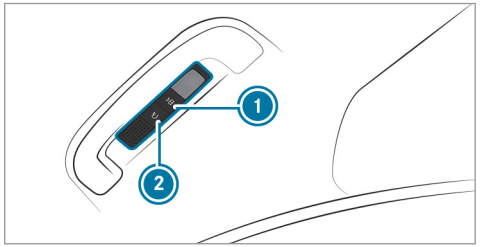

You can switch the reading and make-up lamps on or off for one side or both sides of the vehicle.

▶ Press button ① until the reading lamp and/or the make-up lamp switch on or off on the respective side of the vehicle.

▶ Press button ② until the reading lamp and the make-up lamp switch on or off on both sides of the vehicle.

Adjusting the ambient lighting

Multimedia system:

→ Vehicle ▸▸ Light Settings ▸▸ Ambient Light

Setting the color

▶ Select Color.

▶ Set a color.

Adjusting the brightness

▶ Select Brightness.

▶ Set a brightness value.

Activating the brightness for zones

▶ Select Brightness Zones.

▶ Activate ☑ or deactivate ☐ the function. The Display, Front and Rear zones can be set separately.

ⓘ Setting brightness zones is not available for the Rear Seat Entertainment System.

Activating multi-colored lighting

▶ Select Multi-color.

▶ Activate ☑ or deactivate ☐ the function. There are ten preset color combinations available.

Activating multi-colored animation

▶ Select Multi-color Anim..

▶ Activate ☑ or deactivate ☐ the function. The chosen color combination will change at predefined intervals.

Activating dependency on air conditioning settings

▶ Select Climate.

▶ Activate ☑ or deactivate ☐ the function. If changes are made to the temperature setting in the vehicle, the color of the ambient lighting will change briefly.

Activating welcome lighting

▶ Select Welcome.

▶ Activate ☑ or deactivate ☐ the function. When the vehicle is unlocked, a special interior lighting sequence will run.

Setting the interior lighting switch-off delay time

Multimedia system:

→ Vehicle ▸▸ Light Settings ▸▸ Int. Light Switch Off

▶ Set the switch-off delay time.

Windshield wiper and windshield washer system

Switching the windshield wipers on/off

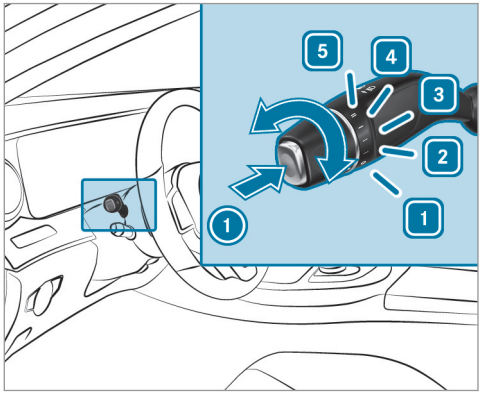

1 0 Windshield wiper off
2 ••• Intermittent wiping, normal
3 •••• Intermittent wiping, frequent
4 — Continuous wiping, slow
5 = Continuous wiping, fast

▶ Turn the combination switch to the corresponding position 1 - 5.

▶ **Single wipe/washing:** push the button on the combination switch in the direction of arrow 1.
- Single wipe
- Wipes with washer fluid

Changing the windshield wiper blades

⚠ **WARNING** Risk of becoming trapped if the windshield wipers are switched on while wiper blades are being replaced

If the windshield wipers begin to move while you are changing the wiper blades, you can be trapped by the wiper arm.

▶ Always switch off the windshield wipers and the ignition before changing the wiper blades.

Moving the wiper arms to the replacement position

▶ If the ignition has been switched off, switch it on first of all.

▶ Switch the ignition off.

▶ Within around 15 seconds, press and hold the button on the combination switch for approximately three seconds (→ page 157).
The wiper arms will move into the replacement position.

Removing the wiper blades

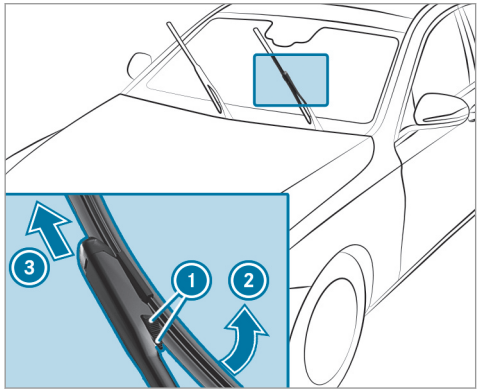

- Push both retaining clips 1.
- Fold the wiper blade away from the wiper arm in the direction of arrow 2.
- Remove the wiper blade in the direction of arrow 3.

Installing the wiper blades

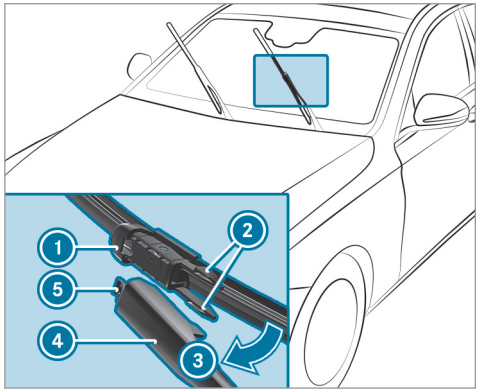

- Place recess 1 of the new wiper blade over locking clip 5.
- Fold wiper blade onto the wiper arm in the direction of arrow 3 until retaining clips 2 engage in bracket 4.
- Make sure that the wiper blade is seated correctly.
- Fold the wiper arm back onto the windshield.
- Switch on the ignition.
- Press the button on the combination switch (→ page 157).
  The wiper arms will move into the original position.
- Switch the ignition off.

Replacing the windshield wiper blades (MAGIC VISION CONTROL)

Moving the wiper arms to the replacement position

- If the ignition has been switched off, switch it on first of all.
- Switch the ignition off.
- Within around 15 seconds, press and hold the button for approximately 3 seconds(→ page 157).
  The wiper arms will move into the replacement position.

Removing the wiper blades

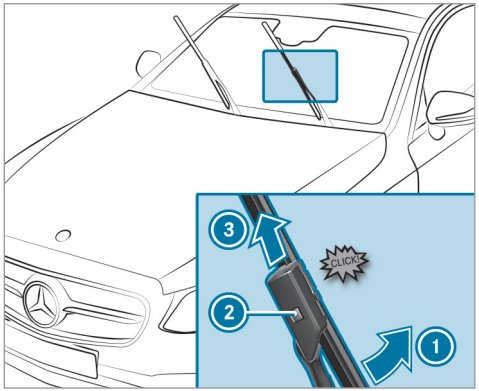

▶ **To bring the wiper blade into position to be removed:** hold the wiper arm firmly in one hand. With the other hand, turn the wiper blade in the direction of arrow ① beyond the point of resistance.
The wiper blade will engage in the removal position with a click.

▶ **To remove the wiper blade:** press release button ②, pull the wiper blade in the direction of arrow ③ and remove.

Installing the wiper blades

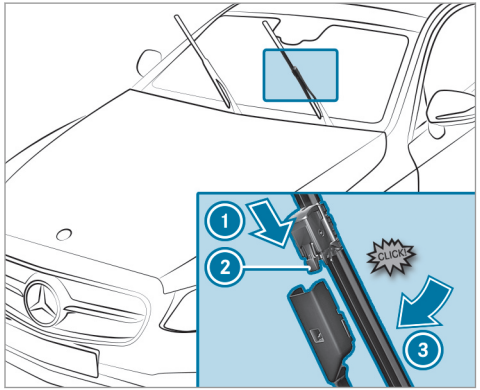

▶ Push the new wiper blade onto the wiper arm in the direction of arrow ① until release button ② engages.

▶ Push the wiper blade beyond the point of resistance in the direction of arrow ③ on the wiper arm.
The wiper blade will engage with a noticeable click and move freely again.

▶ Fold the wiper arm back onto the windshield.

▶ Switch on the ignition.

▶ Press the button on the combination switch (→ page 157).
The wiper arms will move into the original position.

▶ Switch the ignition off.

Mirrors

Operating the outside mirrors

⚠ **WARNING** Risk of injury from adjusting the vehicle settings while the vehicle is in motion

You could lose control of the vehicle in the following situations:

- if you adjust the driver's seat, the head restraint, the steering wheel or the mirror while the vehicle is in motion
- if you fasten your seat belt while the vehicle is in motion

▶ Before starting the engine: adjust the driver's seat, the head restraint, the steering wheel or the mirror and fasten your seat belt.

⚠ **WARNING** Risk of accident due to misjudgment of distances when using the passenger mirror

The outside mirror on the front-passenger side reflects objects on a smaller scale. The objects in view are in fact closer than they appear.

As a result, you may misjudge the distance between you and the road user driving behind you, for example, when changing lanes.

▶ Therefore, always look over your shoulder in order to ensure that you are aware of the actual distance between you and the road users driving behind you.

Folding the outside mirrors in/out

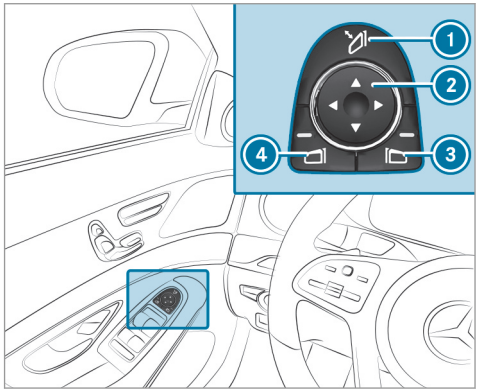

▶ Briefly press switch ①.

Resetting the outside mirrors

ⓘ If the battery has been disconnected or completely discharged, the outside mirrors must be reset. Only then will the automatic mirror folding function work properly.

▶ Briefly press switch ①.

Adjusting the outside mirrors

▶ Select the required mirror using button ③ or ④.

▶ Use button ② to set the position of the mirror you have selected.

Engaging the outside mirrors

▶ Press and hold button ①.
You will hear a click and the mirror will audibly engage in position. The mirror is set in the correct position.

Automatic anti-glare mirrors function

⚠ **WARNING** Risk of acid burns and poisoning due to the anti-glare mirror electrolyte

Electrolyte may escape if the glass in an automatic anti-glare mirror breaks.

The electrolyte is hazardous to health and causes irritation. It must not come into contact with your skin, eyes, respiratory organs or clothing or be swallowed.

▶ If you come into contact with electrolyte, observe the following:
- Immediately rinse the electrolyte from your skin with water and seek medical attention.
- If electrolyte comes into contact with your eyes, immediately rinse them thoroughly with clean water and seek medical attention.
- If the electrolyte is swallowed, immediately rinse your mouth out thoroughly. Do not induce vomiting. Seek medical attention immediately.
- Immediately change out of clothing which has been contaminated with electrolyte.
- If an allergic reaction occurs, seek medical attention immediately.

The inside rearview mirror and the outside mirror on the driver's side will automatically go into anti-glare mode if light from a headlamp hits the sensor on the inside rearview mirror.

System limits

The system will not go into anti-glare mode if:
- The engine is switched off.
- Reverse gear is engaged.
- The interior lighting is switched on.

Front-passenger outside mirror parking position function

ⓘ The parking position is available only in vehicles with a memory function.

The parking position makes parking easier.

The front-passenger outside mirror will swivel downwards in the direction of the rear wheel on the front passenger's side when:
- The parking position is stored (→ page 162).
- The front-passenger mirror is selected.
- Reverse gear is engaged.

The front-passenger outside mirror will move back to its original position when:
- You shift the transmission to another transmission position.

- You are traveling at a speed greater than 9 mph (15 km/h).
- You press the button for the outside mirror on the driver's side.

Storing the parking position of the front-passenger outside mirror using reverse gear

Storing

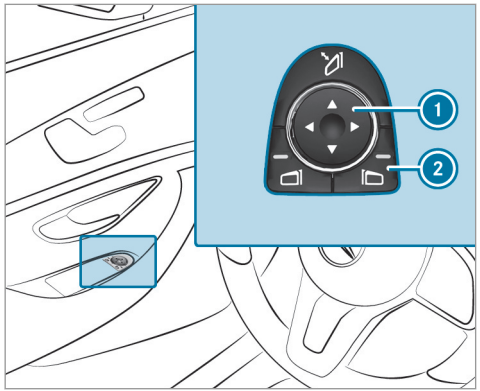

▶ Select the front-passenger outside mirror using button ②.

▶ Engage reverse gear.

▶ Move the front-passenger outside mirror into the desired parking position using button ①.

Calling up

▶ Select the front-passenger outside mirror using button ②.

▶ Engage reverse gear.
The front-passenger outside mirror will move to the stored parking position.

Activating/deactivating the automatic mirror folding function

Multimedia system:

→ Vehicle ▸▸ Vehicle Settings ▸▸ Autom. Mirror Folding

▶ Activate ☑ or deactivate ☐ the function.

Operating the sun visors

Using the single sun visor

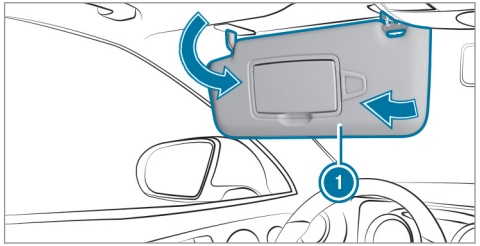

▶ **Glare from the front:** fold sun visor ① down.

▶ **Glare from the side:** swing sun visor ① to the side.

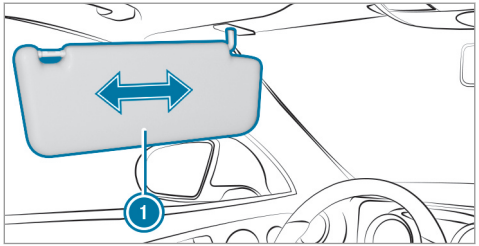

▶ Vehicles with an extendable sun visor: slide sun visor ① horizontally as required.

Using the additional sun visor

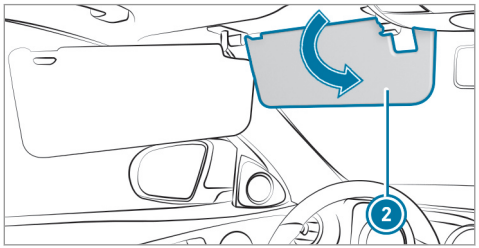

▶ Vehicles with an additional sun visor: fold additional sun visor ② down.

Area permeable to radio waves on the windshield

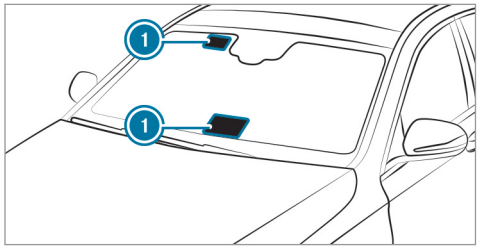

Radio-controlled equipment, such as toll systems, can be mounted only on areas ① of the windshield that are permeable to radio waves.

Areas permeable to radio waves ① are best visible from outside the vehicle when the windshield is illuminated with an external light source.

Note this position for vehicles with:

- Windshield heating
- Infrared reflective windshield

Infrared-reflective windshield function

The infrared-reflective windshield is coated and reduces the build-up of heat in the vehicle interior.

The coating shields the vehicle interior from radio waves.

Overview of climate control systems

Notes on climate control

An interior air filter in combination with the prefilter in the engine compartment must always be used so that the air conditioning system, pollution level monitoring and the air filtration work correctly. Make sure that the filter is installed correctly and the filter housing in the engine compartment is closed correctly using the cap and always tightly sealed when in operation. Use filters recommended and approved by Mercedes-Benz. Always have service work carried out at a qualified specialist workshop.

Overview of the air conditioning control panel

Plug-in hybrid: observe the notes in the Supplement. Otherwise, you may fail to recognize dangers.

The indicator lamps on the buttons indicate that the corresponding function is activated.

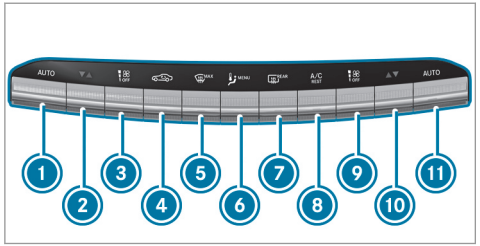

1. AUTO Sets climate control to automatic, left(→ page 165)
2. ▼▲ Sets the temperature, left
3. OFF Sets the airflow, left, or switches off climate control
4. Switches air-recirculation mode on/off (→ page 167)
5. MAX Defrosts the windshield
6. MENU Calls up the air conditioning menu
7. REAR Switches the rear window heater on/off
8. A/C REST Switches the A/C function on/off(→ page 165)
   Switches residual heat on/off (→ page 168)
9. OFF Sets the airflow, right, or switches off climate control
10. ▼▲ Sets the temperature, right
11. AUTO Sets climate control to automatic, right

Overview of the rear operating unit

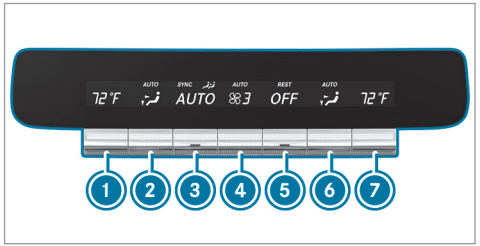

Example: USA

1. Sets the temperature, left
2. Sets the air distribution, left

③ Sets climate control to automatic mode (→ page 166)
④ Sets the airflow
⑤ Switches climate control on/off (→ page 165)
Switches the residual heat on/off (→ page 168)
⑥ Sets the air distribution, right
⑦ Sets the temperature, right

Operating the climate control system

Switching climate control in the front on or off

▶ **To switch on:** set the airflow to level 1 or higher using the [OFF] button.

▶ **To switch off:** set the airflow to level 0 using the [OFF] button.

ⓘ If climate control is switched off, the windows may fog up more quickly. Switch off climate control only briefly.

Switching rear passenger compartment climate control on/off

▶ Press button ⑤.

ⓘ When rear passenger compartment climate control is switched off, the indicator lamp is activated and **OFF** is shown on the rear passenger compartment display.

Switching the A/C function on or off via the control panel

The A/C function heats, cools and dehumidifies the vehicle's interior air.

▶ Press the [A/C REST] button.

Switch off the A/C function only briefly otherwise the windows may fog up more quickly.

Condensation may drip from the underside of the vehicle when cooling mode is active. This is not a sign that there is a malfunction.

Activating/deactivating the A/C function via the multimedia system

Multimedia system:

→ Vehicle ▸▸ [Climate Control] Climate Control ▸▸ A/C

The A/C function heats, cools and dehumidifies the vehicle's interior air.

▶ Activate ☑ or deactivate ☐ the function.

Setting climate control in the front compartment to automatic mode

In automatic mode, the set temperature is regulated by the temperature of the dispensed air and the airflow.

▶ Press the [AUTO] button.

▶ **To switch to manual mode:** press the [OFF] or [▼▲] button.

Setting rear passenger compartment climate control to automatic mode

In automatic mode, the set temperature is regulated by the temperature of the dispensed air and the airflow.

▶ Press button ③.

Climate style

Climate style function

In automatic mode, you can select the following climate style settings for the driver's and front passenger areas:

- **FOCUS:** high airflow, slightly cooler setting
- **MEDIUM:** medium airflow, standard setting
- **DIFFUSE:** low airflow, slightly warmer and draft-free setting

Adjusting the climate mode settings

Multimedia system:

→ Vehicle ▸▸ Climate Control ▸▸ Climate Mode

▶ Select Driver and/or Passenger.

▶ Select FOCUS, MEDIUM or DIFFUSE.

ⓘ To feel the effect of the climate style, the AUTO function must be active (→ page 165).

Overview of the air distribution settings

The symbols on the display indicate which vents the airflow is being directed through:

- defroster vents
- center and side air vents
- footwell vents
- center, side and footwell vents
- defroster and footwell vents
- all vents
- defroster, middle and side air vents
- automatic air distribution

Setting the air distribution

Multimedia system:

→ Vehicle ▸▸ Climate Control ▸▸ Air Distribution

▶ Select Driver and/or Passenger.

▶ Set the air distribution.

Setting the footwell temperature

Multimedia system:

→ Vehicle ▸▸ Climate Control ▸▸ Footwell Temperature

▶ Select Driver and/or Passenger.

▶ Set the footwell temperature.

Setting the rear climate control using the multimedia system

Multimedia system:

→ Vehicle ▸▸ Climate Control ▸▸ Rear

Activating rear climate control

If this function is activated, the settings from the front control panel are automatically adopted for rear climate control.

- ▶ Select Rear On.
- ▶ Activate ☑ or deactivate ☐ the function.

Controlling the rear climate control automatically

- ▶ Select AUTO.
- ▶ Activate ☑ or deactivate ☐ the function.

Setting the airflow

- ▶ Select Airflow.
- ▶ Set the airflow.

Setting the temperature

- ▶ Select Temperature.
- ▶ Select Rear Right and/or Rear Left.
- ▶ Set the temperature.

Setting the air distribution

- ▶ Select Air Distribution.
- ▶ Select Rear Right and/or Rear Left.
- ▶ Set the air distribution.

Activating or deactivating the climate control synchronization function using the multimedia system

Multimedia system:

→ Vehicle ▸▸ Climate Control ▸▸ SYNC

The climate control can be controlled centrally using the synchronization function. The temperature setting is automatically adopted for all climate zones.

- ▶ Activate ☑ or deactivate ☐ the function.

Removing condensation from the windows

Windows fogged up on the inside

- ▶ Press the AUTO button.
- ▶ If the windows continue to fog up: press the MAX button.

Windows fogged up on the outside

- ▶ Switch on the windshield wipers.
- ▶ Press the AUTO button.

Switching air-recirculation mode on/off

- ▶ Press the button.
  The interior air will be recirculated.

Air-recirculation mode automatically switches to fresh air mode after some time.

ⓘ If air-recirculation mode is switched on, the windows may fog up more quickly. Switch on air-recirculation mode only briefly.

Switching residual heat on/off in the front compartment

Requirements:

- The vehicle is parked.

It is possible to make use of the residual heat from the engine to continue heating or ventilating the front compartment of the vehicle for approximately 30 minutes, depending on the temperature set.

▶ **To switch on:** press the MENU REST or A/C REST button.

Residual heat will be switched off automatically.

Switching residual heat on/off in the rear passenger compartment

Requirements:

- The vehicle is parked.

When the residual heat of the engine is activated in the rear passenger compartment, you can heat or ventilate the front and rear compartments for approximately 15 minutes.

▶ Press button 5.

Activating/deactivating ionization

Multimedia system:

→ Vehicle ▸▸ Climate Control ▸▸ Ionization

Ionization cleans and refreshes the interior air of the vehicle. The ionization of the interior air is odorless.

▶ Activate ☑ or deactivate ☐ the function.

Fragrance system

Setting the fragrance system

Requirements:

- Automatic climate control is activated.
- The glove box is closed.

Multimedia system:

→ Vehicle ▸▸ Climate Control ▸▸ Air Freshener

The fragrance system distributes a pleasant fragrance throughout the vehicle interior from a flacon located in the glove box.

▶ **To set the intensity:** select High, Medium, Low or Off.

Inserting or removing the flacon of the fragrance system

⚠ **WARNING** Risk of injury from liquid perfume

If children open the flacon, they could drink the liquid perfume or it could come into contact with their eyes.

▶ Do not leave children unattended in the vehicle.

▶ Consult a doctor immediately if liquid perfume has been drunk.

- If liquid perfume comes into contact with your eyes or skin, rinse your eyes with clean water.
- If symptoms continue, consult a doctor.

ENVIRONMENTAL NOTE Environmental damage due to improper disposal of full flacons

Full flacons must not be disposed of with household waste.

-

Full flacons must be taken to a harmful substance collection point.

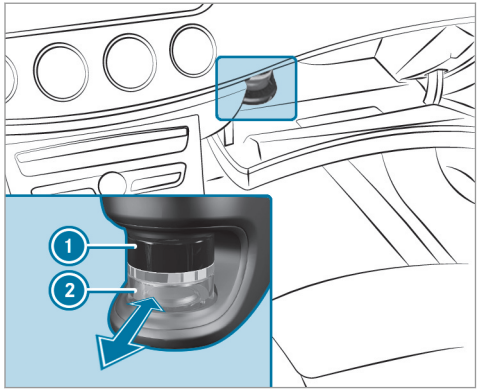

1 Cap
2 Flacon

- **To insert:** slide the flacon into the holder as far as it will go.
- **To remove:** pull out the flacon.

If you do not use genuine Mercedes-Benz interior perfumes, observe the manufacturers' safety notices on the perfume packaging.

Dispose of the genuine Mercedes-Benz interior perfume flacon when it is empty and do not refill it.

Refillable flacon

- Unscrew the cap of the empty flacon.
- Fill the flacon with a maximum of 0.5 fl. oz. (15 ml).
- Screw the cap back on to the flacon.

Always refill the empty refillable flacon with the same perfume. Observe the separate information sheet with the flacon.

Information on the windshield heater

The windshield heater is switched on automatically if the MAX button is activated.

After the vehicle is started, the windshield heater is switched on automatically as required.

Air vents

Adjusting the front air vents

WARNING - Danger of burns or frostbite due to being too close to the air vents

Very hot or very cold air can flow from the air vents.

This could result in burns or frostbite in the immediate vicinity of the air vents.

- ▶ Make sure that all vehicle occupants always maintain a sufficient distance to the air vents.
- ▶ If necessary, direct the airflow to another area of the vehicle interior.

To guarantee the fresh air supply through the air vents into the vehicle interior, comply with the following:

- Always keep the vents and the ventilation grille in the vehicle interior free.
- Keep the air inlet free of deposits (→ page 415).

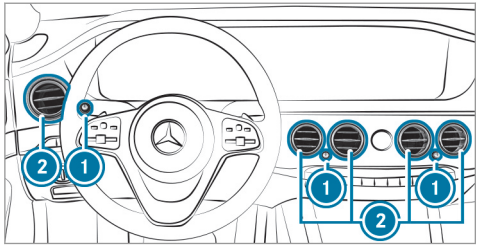

- ▶ **To open or close:** turn controller 1 to the left or right as far as it will go.
- ▶ **To adjust the air direction:** hold air vent 2 in the center and move it up or down or to the left or right.

Adjusting the rear air vents

Adjusting the rear air vents

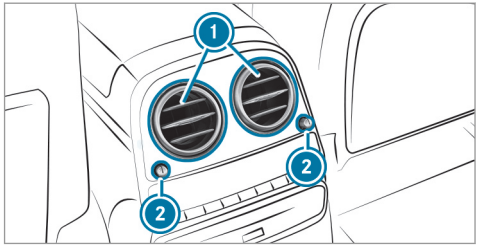

- ▶ **To open or close:** turn controller 2 counter-clockwise or clockwise as far as it will go.
- ▶ **To adjust the air direction:** hold air vent 1 in the center and move it up or down or to the left or right.

Adjusting the rear side air vents

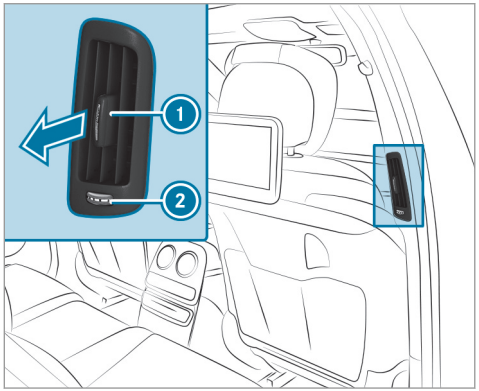

- **To open or close:** turn controller ② counter-clockwise or clockwise.
- **To adjust the air direction:** hold air vent ① in the center and move it up or down or to the left or right.

Opening or closing the air vent in the glove box

NOTE Damage to temperature-sensitive objects in the glove box

Temperature-sensitive objects stored in the glove box may be damaged by the air vent located inside it.

- Close the air vent when you heat the vehicle.
- At high outside temperatures, open the air vent and switch on the A/C function.

The automatic climate control must be switched on to cool the glove box.

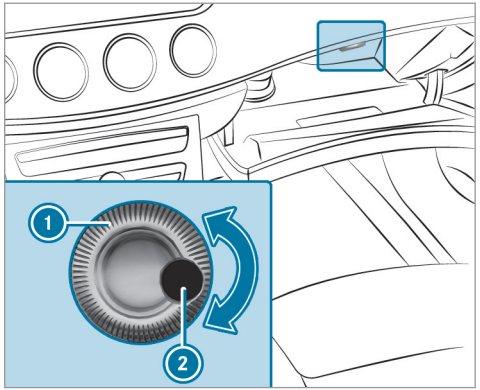

① Air vent controller
② Air vent

- **To open or close:** turn controller ① to the left or right.

Driving

Notes on Mercedes-AMG vehicles

Observe the notes on the following topics in the Supplement, as you may otherwise fail to recognize dangers:

- RACE START
- AMG adaptive sport suspension system
- (DYNAMIC SELECT switch) drive programs
- Functions of ESP®

Switching on the power supply or the ignition (without engine start)

⚠ **WARNING** Risk of accident and injury due to children left unattended in the vehicle

If children are left unattended in the vehicle, they could:

- Open doors, thereby endangering other persons or road users.
- Get out and be struck by oncoming traffic.
- Operate vehicle equipment and become trapped, for example.

In addition, the children could also set the vehicle in motion, for example by:

- Releasing the parking brake.
- Changing the transmission position.
- Starting the vehicle.

▶ Never leave children unattended in the vehicle.

▶ When leaving the vehicle, always take the key with you and lock the vehicle.

▶ Keep the vehicle key out of reach of children.

Also observe the "Notes on pets in the vehicle".

Requirements:

- The SmartKey is located in the vehicle and the SmartKey battery is not discharged.
- The brake pedal is not depressed.

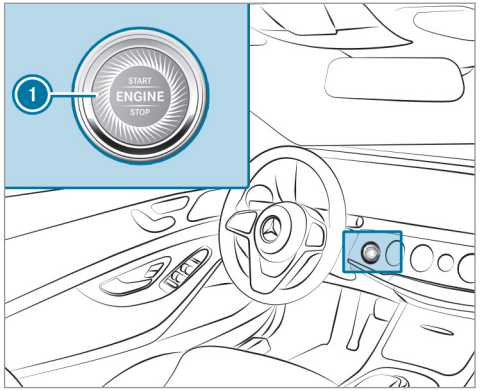

▶ **To switch on the power supply:** press button 1 once.
You can activate the windshield wipers, for example.

The power supply is switched off again if the following conditions are met:

- You open the driver's door.
- You press button 1 twice more.

▶ **To switch on the ignition:** press button ① twice.
The indicator lamps in the instrument cluster light up.

The ignition is switched off again if one of the following conditions is met:

- You do not start the vehicle within 15 minutes and the transmission is in position P or the electric parking brake is applied.
- You press button ① once.

Starting the vehicle

Starting the vehicle with the start/stop button

⚠ **DANGER** Risk of death caused by exhaust gases

Combustion engines emit poisonous exhaust gases such as carbon monoxide. Inhaling these exhaust gases is hazardous to health and leads to poisoning.

▶ Never leave the engine or, if present, the auxiliary heating running in an enclosed space without sufficient ventilation.

⚠ **WARNING** Risk of fire due to flammable material in the engine compartment or the exhaust system

Flammable materials brought in by either animals or environmental influences may ignite if they come into contact with hot parts of the engine or exhaust system.

▶ Therefore, check regularly that there are no flammable materials in the engine compartment or on the exhaust system.

Requirements:

- The SmartKey is located in the vehicle and the SmartKey battery is not discharged.

▶ Shift the transmission to position P or N.

▶ Depress the brake pedal and press button ① once.

▶ If the vehicle does not start: switch off non-essential consumers and press button ① once.

▶ If the vehicle still does not start and the Place the Key in the Marked Space See Operator's Manual display message also appears in the multifunction display: start the vehicle in emergency operation mode.

ⓘ You can switch off the engine while driving by pressing button ① for about three seconds or by pressing button ① three times within three seconds. Be sure to observe the safety notes under "Driving tips" (→ page 177).

Starting the vehicle with SmartKey in the marked space (emergency operation mode)

If the vehicle does not start and the Place the Key in the Marked Space See Operator's Manual display message appears in the multifunction display, you can start the vehicle in emergency operation mode.

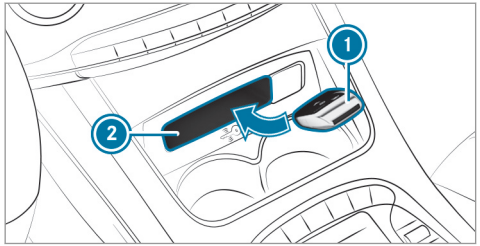

- Make sure that marked space (2) is empty.
- Remove SmartKey (1) from the key ring.
- Place SmartKey (1) in marked space (2). The vehicle will start after a short time.

  If you remove SmartKey (1) from marked space (2) the engine continues running. For further vehicle starts however, SmartKey (1) must be located in marked space (2) during the entire journey.
- Have SmartKey (1) checked at a qualified specialist workshop.

If the vehicle does not start:

- Leave SmartKey (1) in marked space (2).
- Depress the brake pedal and start the vehicle using the start/stop button.

(i) You can also switch on the power supply or the ignition with the start/stop button.

Starting the vehicle via Remote Online services

Cooling or heating the vehicle interior before commencing your journey

(i) This function is not available in all countries.

If you start the vehicle via your smartphone, the previously selected air conditioning adjustment is active.

Ensure the following before starting the engine:

- The legal stipulations in the area where your vehicle is parked allow engine starting via smartphone.
- It is safe to start and run the engine where your vehicle is parked.
- The fuel tank is sufficiently filled.
- The starter battery is sufficiently charged.

(i) You can also set the temperature with your smartphone. Information on Mercedes me connect and other services: https://www.mercedes.me
This function is not available for all models.

Charging the battery before commencing your journey

(i) This function is not available in all countries.

If the vehicle battery is discharged, you receive a message on your smartphone. You can then start the vehicle with the smartphone to charge the battery. The vehicle is automatically switched off after ten minutes.

Ensure the following before starting the engine:

- The legal stipulations in the area where your vehicle is parked allow engine starting via smartphone.
- It is safe to start and run the engine where your vehicle is parked.
- The fuel tank is sufficiently filled.

Starting the vehicle (Remote Online)

⚠ **WARNING** Risk of crushing or entrapment due to unintentional starting of the engine

Limbs could be crushed or trapped if the engine is started unintentionally during service or maintenance work.

▶ Always secure the engine against unintentional starting before carrying out maintenance or repair work.

Requirements:

- Park position P is selected.
- The anti-theft alarm system is not activated.
- The panic alarm is not activated.
- The hazard warning light system is switched off.
- The hood is closed.
- The doors are closed and locked.
- The windows and sliding sunroof are closed.

▶ Start the vehicle using the smartphone. After every vehicle start, the engine runs for ten minutes.

You can carry out a maximum of two consecutive starting attempts. The vehicle must be started once with the SmartKey before trying to start the vehicle again with the smartphone. you can stop the vehicle again at any time.

ⓘ Further information can be found in the smartphone app.

Securing the engine against starting before carrying out maintenance or repair work:

▶ Switch on the hazard warning light system.

or

▶ Unlock the doors.

or

▶ Open a side window or the sliding sunroof.

Breaking-in notes

Mercedes-AMG vehicles: observe the notes in the Supplement. Otherwise, you may fail to recognize dangers.

To preserve the engine during the first 1,000 miles (1,500 km):

- Drive at varying road speeds and engine speeds.
- Drive the vehicle in drive program C or E.
- Shift to the next highest gear at the very latest when the needle reaches the last third before the red area in the tachometer.
- Do not shift down a gear manually in order to brake.
- Avoid overstraining the vehicle, e.g. driving at full throttle.
- Do not depress the accelerator pedal past the pressure point (kickdown).
- Only increase the engine speed gradually and accelerate the vehicle to full speed after 1,000 miles (1,500 km).

This also applies when the engine or parts of the drivetrain have been replaced.

Please also observe the following breaking-in notes:

- In certain driving and driving safety systems, the sensors adjust automatically while a certain distance is being driven after the vehicle has been delivered or after repairs. Full system effectiveness is not reached until the end of this teach-in process.
- Brakepads, brake discs and tires that are either new or have been replaced only achieve optimum braking effect and grip after several hundred kilometers of driving. Compensate for the reduced braking effect by applying greater force to the brake pedal.

Notes on optimized acceleration

If all necessary requirements and activation conditions are fulfilled, the best possible acceleration can be achieved from a standstill.

Do not use the optimized acceleration on public roads. Individual wheels could spin and you could lose control of the vehicle. There is an increased risk of skidding and/or accident.

Be sure to observe the safety notes and information on ESP® (→ page 202).

Pulling away with optimized acceleration

⚠ **WARNING** Risk of skidding and having an accident from wheels spinning

When you use optimized acceleration, individual wheels could spin and you could lose control of the vehicle.

If ESP® is deactivated, there is a risk of skidding and accident.

▶ Make sure that no persons or obstacles are in the close vicinity of your vehicle.

Requirements:

- The vehicle has been broken in (→ page 175).
- The vehicle and tires are in good condition.
- You are on a high-grip roadway.
- The engine and transmission are at normal operating temperature.

! **NOTE** Increased wear due to optimized acceleration

When pulling away with optimized acceleration, all components of the drivetrain are subjected to a very high load.

This can lead to increased component wear.

▶ Do not always pull away with optimized acceleration.

▶ Engage the D drive position (→ page 186).

▶ Move the steering wheel to the straight-ahead position.

▶ Select the sportiest available drive program S+ or S (→ page 183).

▶ Deactivate ESP® (→ page 204).

▶ Depress and hold the brake pedal firmly with your left foot.

▶ With your right foot, fully depress the accelerator pedal.

- After no more than five seconds, take your left foot quickly off the brake, but keep the accelerator pedal depressed.
  The vehicle pulls away at maximum acceleration.
- Switch on ESP® once the acceleration procedure is complete.

Ending optimized acceleration

- Remove your foot from the accelerator pedal.
- Reactivate the ESP®.

ⓘ After you pull away with optimized acceleration, components of the drivetrain can become very hot, which means that optimized acceleration values may be reached again only after a few minutes.

Notes on driving

⚠ **WARNING** Risk of accident due to objects in the driver's footwell

Objects in the driver's footwell may impede pedal travel or block a depressed pedal.

This jeopardizes the operating and road safety of the vehicle.

- Stow all objects in the vehicle securely so that they cannot get into the driver's footwell.
- Always install the floor mats securely and as prescribed in order to ensure that there is always sufficient room for the pedals.
- Do not use loose floor mats and do not place floor mats on top of one another.

⚠ **WARNING** Risk of accident due to unsuitable footwear

Operation of the pedals may be restricted due to unsuitable footwear such as:

- Shoes with platform soles
- Shoes with high heels
- Slippers

- When driving always wear suitable shoes in order to be able to operate the pedals safely.

⚠ **WARNING** Risk of accident when switching off the ignition when driving

If you switch off the ignition while driving, safety functions are restricted or no longer available. This may affect the power steering system and the brake force boosting, for example.

You will then need to use considerably more force to steer and brake.

- Do not switch off the ignition while driving.

⚠ **DANGER** Risk of death caused by exhaust gases

Combustion engines emit poisonous exhaust gases such as carbon monoxide. Inhaling these exhaust gases is hazardous to health and leads to poisoning.

- Never leave the engine or, if present, the auxiliary heating running in an enclosed space without sufficient ventilation.

WARNING Risk of skidding and of an accident due to shifting down on slippery road surfaces

If you shift down on slippery road surfaces to increase the engine braking effect, the drive wheels may lose traction.

- Do not shift down on slippery road surfaces to increase the engine braking effect.

DANGER Risk of fatal injury due to poisonous exhaust gases

If the tailpipe is blocked or sufficient ventilation is not possible, poisonous exhaust gases such as carbon monoxide may enter the vehicle. This is the case when the vehicle becomes stuck in snow, for example.

- Keep the tailpipe and the area around the vehicle free from snow when the engine or the stationary heater are running.
- Open a window on the side of the vehicle facing away from the wind to ensure an adequate supply of fresh air.

WARNING Risk of accident and injury due to being under the influence of alcohol and drugs while driving

Driving when under the influence of alcohol and/or drugs is an extremely dangerous combination. Even small quantities of alcohol or drugs may affect your reflexes, perception and judgment.

The probability of a serious or even fatal accident greatly increases if you drive when under the influence of alcohol or drugs.

- Do not drink alcohol or take drugs while driving, and do not allow anyone to drive who has been drinking alcohol or taking drugs.

WARNING Risk of accident due to the brake system overheating

If you leave your foot on the brake pedal when driving, the brake system may overheat.

This increases the braking distance and the brake system may even fail.

- Never use the brake pedal as a footrest.
- Do not depress the brake pedal and the accelerator pedal at the same time while driving.

NOTE Wearing out the brake linings by continuously depressing the brake pedal

- Do not depress the brake pedal continuously whilst driving.
- To use the braking effect of the engine, shift to a lower gear in good time.

NOTE Damage to the drivetrain and engine when pulling away

- Do not warm up the engine while the vehicle is stationary. Pull away immediately.
- Avoid high engine speeds and driving at full throttle until the engine has reached its operating temperature.

NOTE Damage to the catalytic converter due to non-combusted fuel

The engine is not running smoothly and is misfiring.

Non-combusted fuel may get into the catalytic converter.

- Only depress the accelerator pedal slightly.
- Have the cause rectified immediately at a qualified specialist workshop.

Plug-in hybrid: observe the notes in the Supplement. Otherwise, you may fail to recognize dangers.

Notes on driving on salt-treated roads

The braking effect is limited on salt-treated roads.

Therefore, observe the following notes:

- Due to salt build-up on the brake discs and brakepads, the braking distance can increase considerably or result in braking only on one side
- Maintain a much greater safe distance to the vehicle in front

To remove salt build-up:

- Brake occasionally while paying attention to the traffic conditions
- Carefully depress the brake pedal at the end of the journey and when starting the next journey

Notes on hydroplaning

Hydroplaning can take place once a certain amount of water has accumulated on the road surface.

Observe the following notes during heavy precipitation or in conditions in which hydroplaning may occur:

- Reduce speed
- Avoid tire ruts
- Avoid sudden steering movements
- Brake carefully

ⓘ Also observe the notes on regularly checking wheels and tires (→ page 446).

Notes on driving through water on the road surface

Water which has entered into the vehicle can damage the engine, electrics and transmission.

Water can also enter the air intake of the engine and cause engine damage.

Observe the following if you must drive through water:

- The water, when calm, may only reach the lower edge of the vehicle body
- Drive at walking pace at most, otherwise water can enter the vehicle interior or engine compartment

- Vehicles traveling in front, or oncoming vehicles, can create waves which may exceed the maximum permissible height of the water

The braking effect of the brakes is reduced after fording. Brake carefully while paying attention to the traffic conditions until braking power has been fully restored.

ECO start/stop function

Operation of the ECO start/stop function Mercedes-AMG vehicles: observe the notes in the Supplement. Otherwise, you may fail to recognize dangers.

Vehicles without a 48 V on-board electrical system (EQ Boost technology)

The engine is switched off automatically in the following situations if all vehicle conditions for an automatic engine stop are met:

- You brake the vehicle to a standstill in transmission position D or N.

If you switch on the HOLD function in transmission position D or N, the engine will automatically stop in the following situations:

- You stop behind a vehicle that is pulling away.
- You stop at a stop sign when there is no vehicle in front of you.
- You turn the steering wheel hard at a low speed.

ⓘ In transmission position R, the engine is not switched off automatically even when the HOLD function is switched on.

The engine is restarted automatically if:

- You release the brake pedal in transmission position D when the HOLD function is not active.
- You engage transmission position D or R.
- You depress the accelerator pedal.
- An automatic engine start is required by the vehicle.

ECO start/stop function symbols in the multifunction display:

- The Ⓐ symbol (green) appears when the vehicle is at a standstill: the engine was switched off by the ECO start/stop function.
- The Ⓐ symbol (yellow) appears when the vehicle is at a standstill: not all vehicle conditions for an engine stop have been met.
- Neither the Ⓐ nor Ⓐ symbol appears when the vehicle is at a standstill: an intelligent stop inhibitor was detected, e.g. a stop sign.

If the engine was switched off by the ECO start/stop function and you leave the vehicle, a warning tone sounds and the engine is not restarted. The Vehicle Ready to Drive Switch the Ignition Off Before Exiting display message also appears in the multifunction display. If you do not switch off the ignition, the ignition is automatically switched off after three minutes.

Vehicles with a 48 V on-board electrical system (EQ Boost technology)

The engine is switched off automatically in the following situations if all vehicle conditions for an automatic engine stop are met:

- You brake the vehicle to a standstill in transmission position D or N.
- You depress the brake pedal when traveling at a low speed.

If you switch on the HOLD function or select a different transmission position than R, the engine will automatically stop in the following situations:

- You stop behind a vehicle that is pulling away.
- You stop at a stop sign when there is no vehicle in front of you.
- You turn the steering wheel hard at a low speed.

The engine is restarted automatically if:

- You release the brake pedal in transmission position D when the HOLD function is not active and one of the following conditions are met:
  - Drive program C or E is not selected.
  - Drive program C or E is selected but the vehicle does not start to move.
  - Drive program C or E is selected, the vehicle is moving at a speed of more that 15 mph (20 km/h) and glide mode is not activated.
- You engage transmission position D or R.
- You release the brake pedal, the vehicle is not in glide mode and it starts to move on a gentle downhill gradient at a speed below 2 mph (3 km/h).
- You depress the accelerator pedal.
- You engage drive program S+.
- An automatic engine start is required by the vehicle.

ECO start/stop function symbols in the multifunction display:

- The Ⓐ symbol (green) appears when the vehicle is at a standstill: the engine was switched off by the ECO start/stop function.
- The Ⓐ symbol (yellow) appears when the vehicle is at a standstill: not all vehicle conditions for an engine stop have been met.
- Neither the Ⓐ nor Ⓐ symbol appears when the vehicle is at a standstill: an intelligent stop inhibitor was detected, e.g. a stop sign.

If the engine was switched off by the ECO start/stop function and you leave the vehicle, a warning tone sounds and the engine is not restarted. The Vehicle Ready to Drive Switch the Ignition Off Before Exiting display message also appears in the multifunction display. If you do not switch off the ignition, the ignition is automatically switched off after three minutes.

Deactivating or activating the ECO start/stop function

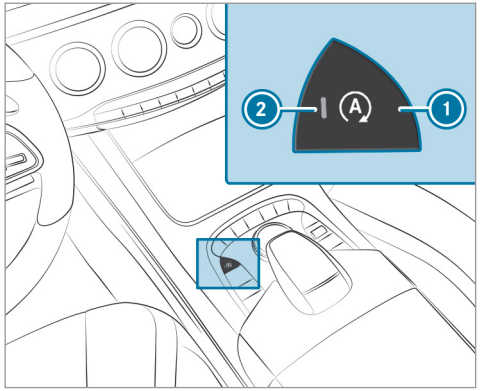

▶ Press button ①.
If indicator lamp ② lights up, the ECO start/stop function is activated.

ⓘ Depending on the model and the vehicle equipment, the button may also be located at a different position in the center console.

ECO display function

The ECO display summarizes your driving characteristics from the start of the journey to its completion and assists you in achieving the most economical driving style.

You can influence consumption by doing the following:

- driving with particular care
- driving the vehicle in drive program E
- observing the gearshift recommendations

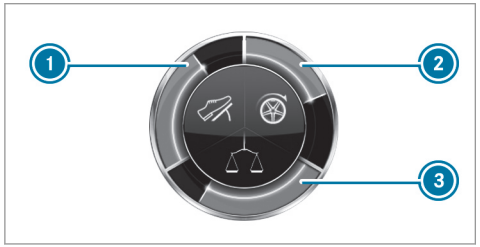

The inner segment will light up and the outer segment will fill up when the following driving style is adopted:

- ① Moderate acceleration
- ② Gentle deceleration and rolling
- ③ Consistent speed

The inner segment will not light up and the outer segment will empty when the following driving style is adopted:

- ① Sporty acceleration
- ② Heavy braking
- ③ Fluctuations in speed

The ECO display will show you when you have driven economically:

- The three outer segments are completely filled simultaneously
- The ECO display lights up

The additional range achieved as a result of your driving style in comparison with a driver with a very sporty driving style is shown under Bonus

fr. Start. The range displayed does not indicate a fixed reduction in consumption.

DYNAMIC SELECT switch

Function of the DYNAMIC SELECT switch

Plug-in hybrid: observe the notes in the Supplement. Otherwise, you may fail to recognize dangers.

Mercedes-AMG vehicles: observe the notes in the Supplement. Otherwise, you may fail to recognize dangers.

Use the DYNAMIC SELECT switch to change between the following drive programs:

- I* **(Individual)**: individual settings
- S **(Sport):** sporty driving style
- C **(Comfort):** comfortable and economical driving style
- **Vehicles with MAGIC BODY CONTROL:** CV **(CURVE):** comfortable driving with curve inclination function
- E **(Eco):** particularly economical driving style

ⓘ The drive program selected appears in the multifunction display of the on-board computer.

Depending on the drive program, the following systems change their characteristics:

- Drive:
  - Engine and transmission management
  - Active Distance Assist DISTRONIC
- ESP®
- Electric power steering

Selecting the drive program

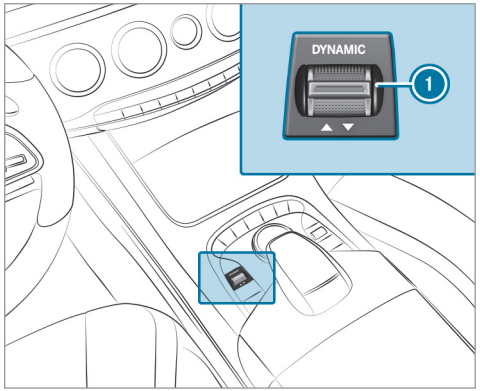

▶ Press DYNAMIC SELECT switch ① forwards or backwards.
The drive program selected appears in the multifunction display.

Configuring drive program I

Multimedia system:

→ Vehicle ▸▸ DYNAMIC SELECT ▸▸ Individual

▶ Select the individual setting.

Switching the operation feedback for drive program on/off

Multimedia system:

→ Vehicle ▸▸ DYNAMIC SELECT

▶ Switch Notification for User on ☑ or off ☐. When this function is active, a corresponding message is shown in the media display when a drive program is selected with the DYNAMIC SELECT switch.

Displaying vehicle data

Multimedia system:

→ Vehicle ▸▸ DYNAMIC SELECT

▶ Select Vehicle Data.
The vehicle data is displayed.

Displaying engine data

Multimedia system:

→ Vehicle ▸▸ DYNAMIC SELECT

▶ Select Engine Data.

ⓘ The actual (maximum) values that can be achieved for engine output and engine torque may deviate from the certified values within the country-specific guidelines for permissible tolerances (basis: UN-ECE No. 85 or country-specific guidelines).

Factors that can influence this are, for example:

- Sea level
- Fuel grade
- Outside temperature

ⓘ The values displayed serve only as orientation. The values for engine output and engine torque shown in the media display may deviate from the actual values.

Automatic transmission

DIRECT SELECT lever

Function of the DIRECT SELECT lever

⚠ **WARNING** Risk of accident due to incorrect gearshifting

If the engine speed is higher than the idle speed and you engage the transmission position D or R, the vehicle may accelerate sharply.

▶ If you engage the transmission position D or R when the vehicle is at a standstill, always depress the brake pedal firmly and do not accelerate at the same time.

WARNING Risk of accident and injury due to children left unattended in the vehicle

If children are left unattended in the vehicle, they could:

- Open doors, thereby endangering other persons or road users.
- Get out and be struck by oncoming traffic.
- Operate vehicle equipment and become trapped, for example.

In addition, the children could also set the vehicle in motion, for example by:

- Releasing the parking brake.
- Changing the transmission position.
- Starting the vehicle.

▶ Never leave children unattended in the vehicle.

▶ When leaving the vehicle, always take the key with you and lock the vehicle.

▶ Keep the vehicle key out of reach of children.

Use the DIRECT SELECT lever to shift the transmission position. The current transmission position is displayed in the multifunction display.

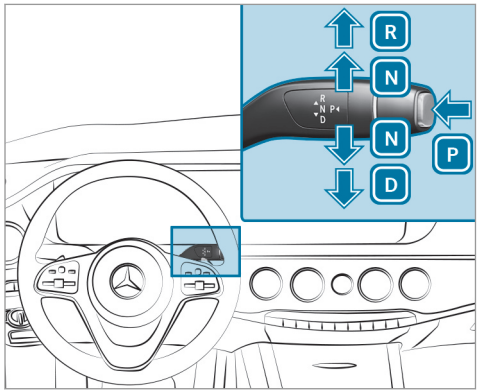

P Park position
R Reverse gear
N Neutral
D Drive position

Engaging reverse gear R

▶ Depress the brake pedal and push the DIRECT SELECT lever upwards past the first point of resistance.
The transmission position display R is shown in the multifunction display.

Engaging neutral N

▶ Depress the brake pedal and push the DIRECT SELECT lever up or down to the first point of resistance.
The transmission position display N is shown in the multifunction display.

Subsequently releasing the brake pedal will allow you to move the vehicle freely, e.g. to push it or tow it away.

Proceed as follows if you want the automatic transmission to remain in neutral N even if the ignition is switched off or the driver's door is opened:

▶ Start the vehicle.

- Depress the brake pedal and engage neutral [N] when the vehicle is stationary.
- Release the brake pedal.
- Switch the ignition off.

ⓘ If you then exit the vehicle leaving the SmartKey in the vehicle, the automatic transmission remains in neutral [N].

Engaging park position P

- Observe the notes on parking the vehicle (→ page 191).
- Depress the brake pedal until the vehicle is stationary.
- When the vehicle is stationary, press button [P].
  Park position is only engaged when the transmission position display [P] is shown in the multifunction display. If no transmission position display [P] appears, secure the vehicle to prevent it from rolling away.

Park position [P] is engaged automatically if one of the following conditions is met:

- You switch off the ignition when the vehicle is stationary and the transmission is in position [D] or [R].
- You open the driver's door when the vehicle is stationary or when driving at a very low speed and the transmission is in position [D] or [R].

ⓘ To maneuver with an open driver's door, open the driver's door while stationary and engage transmission position [D] or [R] again.

Engaging drive position D

- Depress the brake pedal and push the DIRECT SELECT lever down past the first point of resistance.
  The transmission position display [D] is shown in the multifunction display.

When the automatic transmission is in transmission position [D], it shifts the gears automatically. This depends, among other things, on the following factors:

- The selected drive program
- The position of the accelerator pedal
- The driving speed

Manual gearshifting

⚠ **WARNING** Risk of skidding and of an accident due to shifting down on slippery road surfaces

If you shift down on slippery road surfaces to increase the engine braking effect, the drive wheels may lose traction.

- Do not shift down on slippery road surfaces to increase the engine braking effect.

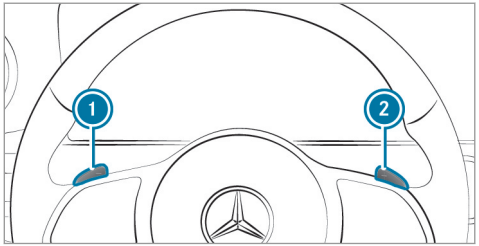

When the automatic transmission is shifted to position D, you can manually shift it with the steering wheel gearshift paddle. If permitted, the automatic transmission shifts to a higher or lower gear depending on the steering wheel gearshift paddle being pulled.

You have two options to manually shift the automatic transmission:

- Temporary setting
- Permanent setting

The gears shift automatically when manual gearshifting is deactivated.

Temporary setting:

▶ **To activate:** pull steering wheel gearshift paddle 1 or 2.
Manual gearshifting is activated for a short time. Transmission position M and the current gear appear in the multifunction display.

ⓘ How long the manual gearshifting stays activated is dependent on various factors. Manual shifting can be deactivated automatically when changing the drive program, restarting the vehicle when the transmission position is engaged again D or due to the driving style.

▶ **To shift up:** pull steering wheel gearshift paddle 2.

▶ **To shift down:** pull steering wheel gearshift paddle 1.

▶ **To deactivate:** pull steering wheel gearshift paddle 2 and hold it in place.
The transmission position D appears in the multifunction display.

Permanent setting:

▶ Change to drive program I* (→ page 183).

▶ Select drive setting M (→ page 184).

Plug-in hybrid: observe the notes in the Supplement. Otherwise, you may fail to recognize dangers.

Mercedes-AMG vehicles: observe the notes in the Supplement. Otherwise, you may fail to recognize dangers.

Gearshift recommendation

Mercedes-AMG vehicles: observe the notes in the Supplement. Otherwise, you may fail to recognize dangers.

The gearshift recommendation assists you in adopting an economical driving style.

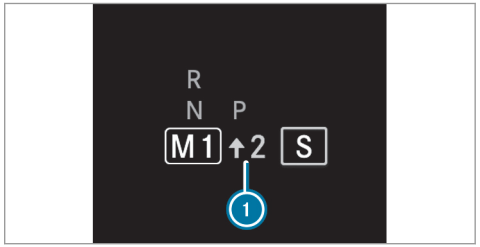

▶ If gearshift recommendation message ① is shown on the multifunction display, shift to the recommended gear.

Using kickdown

Mercedes-AMG vehicles: observe the notes in the Supplement. Otherwise, you may fail to recognize dangers.

▶ **Maximum acceleration:** depress the accelerator pedal beyond the pressure point.

The automatic transmission shifts up to the next gear when the maximum engine speed is reached to protect the engine from overrevving.

Glide mode function

Plug-in hybrid: observe the notes in the Supplement. Otherwise, you may fail to recognize dangers.

Mercedes-AMG vehicles: observe the notes in the Supplement. Otherwise, you may fail to recognize dangers.

With an anticipatory driving style, glide mode helps you to reduce fuel consumption.

Glide mode is characterized by the following:

- The combustion engine is disconnected from the drivetrain and the vehicle continues to roll in neutral.
- The transmission position D is displayed in green in the multifunction display.

Glide mode is activated if the following conditions are met:

- Drive program E is selected.
- The speed is within a suitable range.
- The road's course is suitable, e.g. no steep uphill or downhill inclines or tight bends.
- You do not depress the accelerator or brake pedal.

ⓘ Glide mode can also be activated if you have selected the Eco setting for the drive when in drive program I*.

Glide mode is deactivated again if one of the conditions is no longer met.

Vehicles with Active Distance Assist DISTRONIC: when Active Distance Assist DISTRONIC is active, the glide mode function is restricted.

Function of 4MATIC

4MATIC ensures that all four wheels are driven when needed. Together with ESP® and 4ETS, 4MATIC improves the traction of your vehicle whenever a driven wheel spins due to insufficient traction.

If you fail to adapt your driving style, 4MATIC can neither reduce the risk of an accident nor override the laws of physics. 4MATIC cannot take account of road, weather and traffic conditions. 4MATIC is only an aid. You are responsible especially for maintaining a safe distance from the vehicle in front, for vehicle speed, for braking in good time and for staying in lane.

ⓘ In wintry road conditions, the maximum effect of 4MATIC can be achieved only if you use winter tires (M+S tires), with snow chains if necessary.

Refueling

Refueling the vehicle

WARNING Risk of fire or explosion from fuel

Fuels are highly flammable.

- Fire, open flames, smoking and creation of sparks must be avoided.
- Switch off the ignition and, if available, the stationary heater, before and while refueling the vehicle.

WARNING Risk of injury from fuels

Fuels are poisonous and hazardous to your health.

- Do not swallow fuel or let it come into contact with skin, eyes or clothing.
- Do not inhale fuel vapor.
- Keep children away from fuel.
- Keep doors and windows closed during the refueling process.

If you or other people come into contact with fuel, observe the following:

- Immediately rinse fuel off your skin with soap and water.
- If fuel comes into contact with your eyes, immediately rinse them thoroughly with clean water. Seek medical attention immediately.
- If you swallow fuel, seek medical attention immediately. Do not induce vomiting.
- Change immediately out of clothing that has come into contact with fuel.

WARNING Risk of fire and explosion due to electrostatic charge

Electrostatic charge can create sparks and thereby ignite fuel vapors.

- Before you open the fuel filler cap or take hold of the pump nozzle, touch the metallic vehicle body.
  This discharges any electrostatic charge that may have built up.
- Do not get into the vehicle again during the refueling process.
  Otherwise, electrostatic charge can build up again.

NOTE Damage caused by the wrong fuel

Vehicles with a gasoline engine:

Even small amounts of the wrong fuel could result in damage to the fuel system, the engine and the emission control system.

- The RON requirement is located in the fuel filler flap.
- Only refuel with low-sulfur unleaded fuel.

This fuel may contain up to 10% ethanol. Your vehicle is suitable for use with E10 fuel.

Never refuel using any of the following fuels:

- Diesel
- Gasoline with more than 10% ethanol by volume, e.g. E15, E85, E100
- Gasoline with more than 3% methanol by volume, e.g. M15, M30, M85, M100
- Gasoline with additives containing metal

If you accidentally refuel with the wrong fuel:

▶ Do not switch the ignition on.
▶ Consult a qualified specialist workshop.

! NOTE Do not use diesel to refuel vehicles with a gasoline engine

If you have accidentally refueled with the wrong fuel:

- Do not switch the ignition on. Otherwise fuel can enter the engine.

  Even small amounts of the wrong fuel could result in damage to the fuel system and the engine. The repair costs are high.

▶ Consult a qualified specialist workshop.
▶ Have the fuel tank and fuel lines drained completely.

! NOTE Damage to the fuel system caused by overfilled fuel tanks

▶ Only fill the fuel tank until the pump nozzle switches off.

! NOTE Fuel may spray out when you remove the fuel pump nozzle

▶ Only fill the fuel tank until the pump nozzle switches off.

Requirements

Plug-in-hybrid: for vehicles with a gasoline engine, observe the notes in the Supplement. Otherwise, you may fail to recognize dangers.

- The vehicle is unlocked (→ page 65).

ⓘ Do not get into the vehicle again during the refueling process. Otherwise, electrostatic charge could build up again.

Observe the notes on operating fluids (→ page 482).

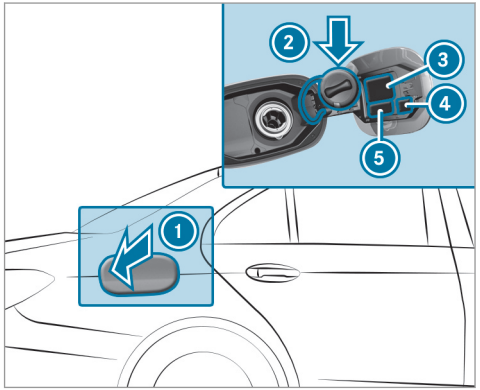

① Fuel filler flap
② Bracket for fuel filler cap
③ Tire pressure table
④ QR code for rescue card
⑤ Fuel type

- Press on the back area of fuel filler flap ①.
- Turn the fuel filler cap counter-clockwise and remove it.
- Insert the fuel filler cap from above into bracket ②.
- Completely insert the pump nozzle into the tank filler neck, hook in place and refuel.
- Only fill the fuel tank until the pump nozzle switches off.
- Replace the cap on the filler neck and turn clockwise until it engages audibly.
- Close fuel filler flap ①.

ⓘ Close the fuel filler flap before locking the vehicle.

Parking

Parking the vehicle

⚠ **WARNING** Risk of accident and injury caused by an insufficiently secured vehicle rolling away.

If the vehicle is not securely parked sufficiently, it can roll away in an uncontrolled way even at a slight downhill gradient.

- Ensure that the parked vehicle is always properly secured against rolling away as follows:
  - On uphill or downhill gradients, turn the front wheels so that the vehicle rolls towards the curb if it starts moving.
  - Apply the parking brake.
  - Switch the transmission to position P.

⚠ **WARNING** Risk of fire caused by hot exhaust system parts

Flammable material such as leaves, grass or twigs may ignite if they come into contact with hot parts of the exhaust system or exhaust gas flow.

- Park the vehicle so that no flammable material can come into contact with hot vehicle components.
- In particular, do not park on dry grassland or harvested grain fields.

⚠ **WARNING** Risk of accident and injury due to children left unattended in the vehicle

If children are left unattended in the vehicle, they could:

- Open doors, thereby endangering other persons or road users.
- Get out and be struck by oncoming traffic.

- Operate vehicle equipment and become trapped, for example.

In addition, the children could also set the vehicle in motion, for example by:

- Releasing the parking brake.
- Changing the transmission position.
- Starting the vehicle.

▶ Never leave children unattended in the vehicle.

▶ When leaving the vehicle, always take the key with you and lock the vehicle.

▶ Keep the vehicle key out of reach of children.

! **NOTE** Damage to the vehicle due to it rolling away

▶ Always secure the vehicle against rolling away.

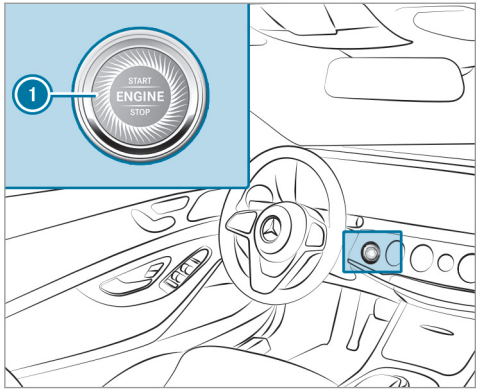

▶ Bring the vehicle to a standstill by applying the brake pedal.

▶ On uphill or downhill gradients, turn the front wheels so that the vehicle rolls towards the curb if it starts moving.

▶ Apply the electric parking brake.

▶ Engage transmission position P in a stationary vehicle with the brake pedal applied (→ page 186).

▶ Switch off the engine and the ignition by pressing button 1.

▶ Release the service brake slowly.

▶ Get out of the vehicle and lock it.

ⓘ When you park the vehicle, you can still operate the side windows and the panoramic sliding sunroof for approximately five minutes if the driver's door is closed.

Garage door opener

Programming buttons for the garage door opener

⚠ **DANGER** Risk of death caused by exhaust gases

Combustion engines emit poisonous exhaust gases such as carbon monoxide. Inhaling these exhaust gases is hazardous to health and leads to poisoning.

▶ Never leave the engine or, if present, the auxiliary heating running in an enclosed space without sufficient ventilation.

⚠ **WARNING** Risk of injury when opening or closing a door with the garage door opener

When you operate or program the door with the integrated garage door opener, people in the range of movement of the door may become trapped or struck by the door.

▶ When using the integrated garage door opener, always make sure that nobody is within the range of movement of the door.

Only operate the following doors using the garage door opener:

- Doors with a safety stop and reversing feature
- Doors which conform to the current U.S. safety standards

Requirements:

- The vehicle has been parked outside the garage or outside the range of movement of the door.
- The engine is switched off.
- The ignition is switched on.

ⓘ The garage door opener function is always available when the ignition is switched on.

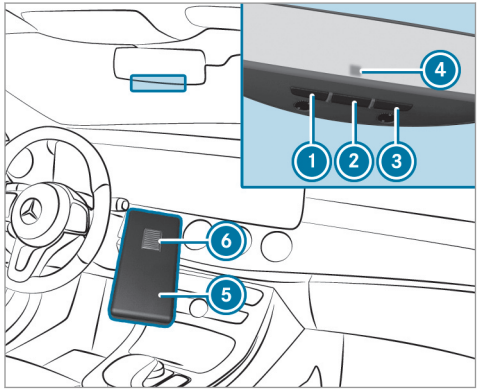

▶ Check if the transmitter frequency of the remote control has the frequency range of 280 to 868 MHz.

Radio equipment approval number:

- NZLMUAHL5 (USA)
- 4112A-MUAHL5 (Canada)

▶ Press and hold button ①, ② or ③ that you wish to program.
Indicator lamp ④ flashes yellow.

ⓘ It can take up to 20 seconds before the indicator lamp flashes yellow.

▶ Release the previously pressed button.
Indicator lamp ④ continues to flash yellow.

▶ Point remote control ⑤ from a distance of 0.4 in (1 cm) to 3 in (8 cm) towards button ①, ② or ③.

▶ Press and hold button ⑥ of remote control ⑤ until one of the following signals appears:

- Indicator lamp ④ lights up green continuously. Programming is complete.
- Indicator lamp ④ flashes green. Programming was successful. Additionally,

synchronization of the rolling code with the door system must also be carried out.

▶ If indicator lamp ④ does not light up or flash green: repeat the procedure.

▶ Release all of the buttons.

ⓘ The remote control for the door drive is not included in the scope of delivery of the garage door opener.

Synchronizing the rolling code
Requirements:

- The door system uses a rolling code.
- The vehicle must be within range of the garage door or door drive.
- The vehicle as well as persons and objects, are located outside the range of movement of the door.

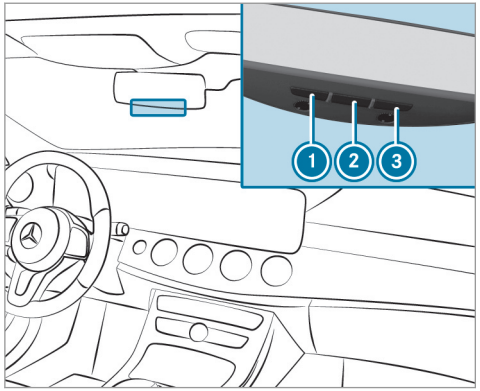

▶ Press the programming button on the door drive unit.
Initiate the next step within approximately 30 seconds.

▶ Press previously programmed button ①, ② or ③ repeatedly until the door closes.
When the door closes, programming is complete.

ⓘ Please also read the operating instructions for the door drive.

Troubleshooting when programming the remote control

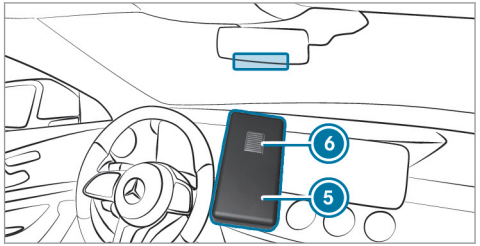

▶ Check if the transmitter frequency of remote control ⑤ is supported.

▶ Replace the batteries in remote control ⑤.

▶ Hold remote control ⑤ at various angles from a distance of 0.4 in (1 cm) to 3 in (8 cm) in front of the inside rearview mirror. You should test every position for at least 25 seconds before trying another position.

- Hold remote control ⑤ at the same angles at various distances in front of the inside rearview mirror. You should test every position for at least 25 seconds before trying another position.
- Note that some remote controls transmit only for a limited period, press button ⑥ on remote control ⑤ again before transmission ends.
- Align the antenna line of the door opener unit with the remote control.

ⓘ Support and additional information on programming:

- On the toll free HomeLink® Hotline on 1-800-355-3515.
- On the Internet at https://www.homelink.com/mercedes.

Opening or closing the door
Requirements:

- The corresponding button is programmed to operate the door.

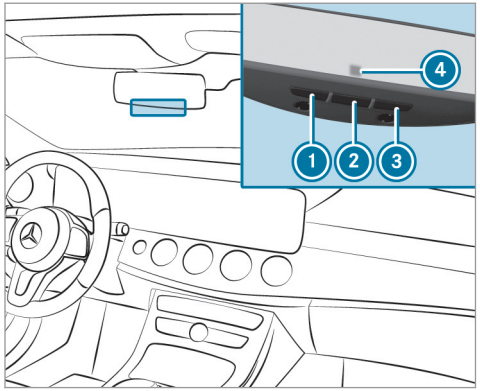

- Press and hold buttons ①, ② or ③ until the door opens or closes.
- If indicator lamp ④ flashes yellow after approximately 20 seconds: press and hold the previously pressed button again until the door opens or closes.

Clearing the garage door opener memory

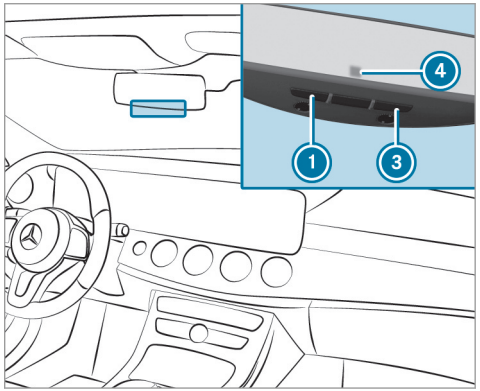

- Press and hold buttons ① and ③. Indicator lamp ④ lights up yellow.
- If indicator lamp ④ flashes green: release buttons ① and ③. The entire memory has been deleted.

Radio equipment approval numbers for the garage door opener

Radio equipment approval numbers

ANATEL

1850-16-6324

Brazil

Este equipamento opera em caráter secundário, isto é, não tem direito à proteção contra interferência prejudicial, mesmo de estações do mesmo tipo, e não pode causar interferência a sistemas operando em caráter primário.

Para maiores informações acessar www.anatel.gov.br

Radio equipment approval numbers

Country	Radio type approval number
Egypt	TAC.2511151293.WIR
Andorra	CE
Australia	R-NZ
Barbados	MED1578
Chile	2488/DFRS20576/F-74
European Union	CE
Gibraltar	CE
Iceland	CE
Jordan	TRC/LPD/2015/299
Canada	IC: 4112A-MUAHL5
Kuwait	CE
Liechtenstein	CE

Country	Radio type approval number
Mexico	RCPGEMU15-0448
Monaco	CE
New Zealand	R-NZ
Norway	CE
Russian Federation	Not required
Saudi Arabia	TA 10525
Switzerland	CE
South Africa	ICASA TA-2015/1386
Turkey	Not required

Country	Radio type approval number
United Arab Emirates	ER41849/15 Dealer No: DA35176/14
United States	FCC ID: NZLMUAHL5

Further information on the declaration of conformity for wireless vehicle components (→ page 25).

Electric parking brake

Electric parking brake function (applying automatically)

WARNING Risk of accident and injury due to children left unattended in the vehicle

If children are left unattended in the vehicle, they could:

- Open doors, thereby endangering other persons or road users.
- Get out and be struck by oncoming traffic.
- Operate vehicle equipment and become trapped, for example.

In addition, the children could also set the vehicle in motion, for example by:

- Releasing the parking brake.
- Changing the transmission position.
- Starting the vehicle.

▶ Never leave children unattended in the vehicle.

▶ When leaving the vehicle, always take the key with you and lock the vehicle.

▶ Keep the vehicle key out of reach of children.

The electric parking brake is applied if the transmission is in position P and one of the following conditions is fulfilled:

- The engine is switched off.
- The seat belt tongue is not inserted in the seat belt buckle of the driver's seat and the driver's door is opened.

ⓘ To prevent application: pull the handle of the electric parking brake.

In the following situations, the electric parking brake is also applied:

- Active Distance Assist DISTRONIC is bringing the vehicle to a standstill.
- The HOLD function is keeping the vehicle stationary.

- Active Parking Assist is keeping the vehicle stationary.

This is the case if one of the following conditions is also fulfilled:

- The engine is switched off.
- The seat belt tongue is not inserted in the seat belt buckle of the driver's seat and the driver's door is opened.
- There is a system malfunction.
- The power supply is insufficient.
- The vehicle is stationary for a lengthy period.

When the electric parking brake is applied, the red PARK (USA) or (P) (Canada) indicator lamp appears in the instrument cluster.

The electric parking brake is not automatically applied if the engine is switched off by the ECO start/stop function.

Electric parking brake function (releasing automatically)

The electric parking brake is released when the following conditions are fulfilled:

- The driver's door is closed.
- The engine is running.
- The transmission is in position D or R and you depress the accelerator pedal or you shift from transmission position P to D or R when on level ground with the driver's door closed.
- If the transmission is in position R, the trunk lid must be closed.
- The seat belt tongue is inserted into the seat belt buckle of the driver's seat.

If the seat belt tongue is not inserted into the seat belt buckle of the driver's seat, the following conditions must be fulfilled:

- You shift from transmission position P.
- You have previously driven at speeds greater than 2 mph (3 km/h).

When the electric parking brake is released, the red PARK (USA) or (P) (Canada) indicator lamp in the instrument cluster goes out.

Applying/releasing the electric parking brake manually

Applying

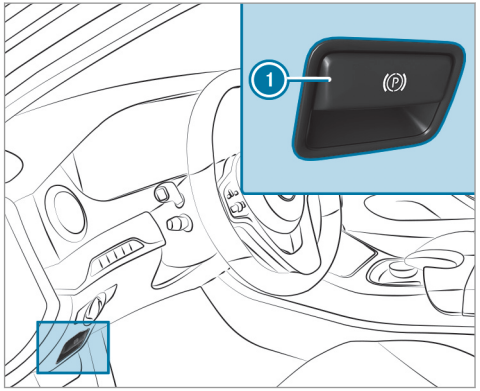

▶ Push handle ①.
The red PARK (USA) or (P) (Canada) indicator lamp appears in the instrument cluster.

ⓘ The electric parking brake is only securely applied if the indicator lamp is lit continuously.

Releasing

▶ Switch on the ignition.

▶ Pull handle ①.
The red PARK (USA) or (P) (Canada) indicator lamp in the instrument cluster goes out.

Emergency braking

▶ Press and hold handle ①.
As long as the vehicle is driving, the Please Release Parking Brake message is displayed.

When the vehicle has been braked to a standstill, the electric parking brake is applied. The red PARK (USA) or (P) (Canada) indicator lamp appears in the instrument cluster.

Information on detecting damage on a parked vehicle

If a collision is detected when the tow-away alarm is armed on a locked vehicle, you will receive a notification in the multimedia system when you switch on the ignition.

You will receive information about the following points:

- The area of the vehicle that may have been damaged.
- The force of the impact.

The following situations can lead to inadvertent activation:

- The parked vehicle is moved, e.g. in a two-story garage.

ⓘ Deactivate the tow-away alarm in order to prevent inadvertent activation. If you deactivate the tow-away alarm, damage detection will also be deactivated.

ⓘ In the case of severe battery discharging, the function for detecting damage on a parked vehicle is automatically deactivated to facilitate the next engine start.

System limits

Detection may be restricted in the following situations:

- The vehicle is damaged without impact, e.g. if an outside mirror is torn off or the paint is damaged by a SmartKey
- An impact occurs at low speed
- The electric parking brake is not applied

Notes on parking the vehicle for an extended period

If you leave the vehicle parked for longer than six weeks, it may suffer damage through disuse.

The 12 V battery may also be impaired or damaged by heavy discharging.

ⓘ Further information can be obtained at a qualified specialist workshop.

Plug-in hybrid: observe the notes on the high-voltage battery in the Supplement. Otherwise, you may fail to recognize dangers.

Standby mode (extension of the starter battery's period out of use)

Standby mode function

ⓘ This function is not available for all models.

If standby mode is activated, energy loss will be minimized during extended periods of non-operation.

Standby mode is characterized by the following:

- the starter battery is preserved.
- the maximum non-operational time appears in the media display.
- the connection to online services is interrupted.
- the ATA (anti-theft alarm system) is not available.
- the interior motion sensor and tow-away alarm functions are not available.
- the function for detecting damage on a parked vehicle is not available.

If the following conditions are fulfilled, standby mode can be activated or deactivated using the multimedia system:

- the engine is switched off.
- the ignition is switched on.

Exceeding the vehicle's displayed non-operational time may cause inconvenience, i.e. it cannot be guaranteed that the starter battery will reliably start the engine.

The starter battery must be charged first in the following situations:

- The vehicle's non-operational time must be extended.
- The Battery Charge Insufficient for Standby Mode message appears in the media display.

ⓘ Standby mode is automatically deactivated when the ignition is switched on.

Activating/deactivating standby mode

Multimedia system:

Vehicle ▸▸ Vehicle Settings ▸▸ Standby Mode

ⓘ This function is not available for all models.

▶ Activate ☑ or deactivate ☐ the function. When you activate the function, a prompt appears.

▶ Select Yes.
Standby mode is activated.

Driving and driving safety systems

Driving systems and your responsibility

Your vehicle is equipped with driving systems which assist you in driving, parking and maneuvering the vehicle. The driving systems are aids and do not relieve you of your responsibility pertaining to road traffic law. Pay attention to the traffic conditions at all times and intervene when necessary. Be aware of the limitations regarding the safe use of these systems.

Information on radar and ultrasonic sensors

Some driving and driving safety systems use radar or ultrasonic sensors to monitor the area in front of, behind or next to the vehicle (depending on the vehicle's equipment).

Depending on the vehicle's equipment, the radar sensors are integrated behind the bumpers and/or behind the radiator grill. The ultrasonic sensors are located in the front and rear bumpers. Keep these parts free of dirt, ice and slush (→ page 421). The sensors must not be covered, for example by bicycle racks, overhanging loads, stickers, foil or foils to protect against stone chipping. Additional license plate bracket can likewise impair the function of the ultrasonic sensors. In the event of damage to the bumpers or radiator grill, or following a collision impacting the bumpers or radiator grill, have the function of the sensors checked at a qualified specialist workshop. If the sensors are damaged, some driving systems and driving safety systems may no longer function properly.

Overview of driving systems and driving safety systems

In this section, you will find information about the following driving systems and driving safety systems:

- 360° Camera (→ page 241)
- ABS (**A**nti-lock **B**raking **S**ystem) (→ page 201)
- Active Distance Assist DISTRONIC (→ page 212)
- AIR BODY CONTROL (→ page 226)
- Active Brake Assist (→ page 205)
- Active Lane Keeping Assist (→ page 259)
- ATTENTION ASSIST (→ page 250)
- BAS (**B**rake **A**ssist **S**ystem) (→ page 202)
- Hill Start Assist (→ page 225)
- EBD (**E**lectronic **B**rakeforce **D**istribution) (→ page 205)
- ESP® (**E**lectronic **S**tability **P**rogram) (→ page 202)
- ESP® Crosswind Assist (→ page 204)
- Active Speed Limit Assist (→ page 216)
- HOLD function (→ page 225)
- STEER CONTROL (→ page 205)
- Active Steering Assist with rescue lane function (→ page 219)
- MAGIC BODY CONTROL (→ page 229)
- Night View Assist (→ page 254)
- Active Emergency Stop Assist (→ page 222)
- Active Parking Assist (→ page 244)
- Parking Assist PARKTRONIC (→ page 233)
- Rear view camera (→ page 238)
- Active Lane Change Assist (→ page 221)
- Cruise control (→ page 210)
- Blind Spot Assist and Active Blind Spot Assist (→ page 256)
- Traffic Sign Assist (→ page 251)

Function of ABS

The Anti-lock Brake System (ABS) regulates the brake pressure in critical driving situations:

- During braking, e.g. at full brake application or insufficient tire traction, the wheels are prevented from locking.
- Vehicle steerability while braking is ensured.

If ABS intervenes when braking, you will feel a pulsing in the brake pedal. The pulsating brake pedal can be an indication of hazardous road

conditions and can serve as a reminder to take extra care while driving.

System limits

- ABS is active from speeds of approx. 5 mph (8 km/h).
- ABS may be impaired or may not function if a malfunction has occurred and the yellow [ABS] ABS warning lamp lights up continuously in the instrument cluster after the engine is started.

Function of BAS (Brake Assist System)

WARNING Risk of an accident caused by a malfunction in BAS (Brake Assist System)

If BAS is malfunctioning, the braking distance in an emergency braking situation is increased.

▶ Depress the brake pedal with full force in emergency braking situations. ABS prevents the wheels from locking.

BAS supports your emergency braking situation with additional brake force.

If you depress the brake pedal quickly, BAS is activated:

- BAS automatically boosts the brake pressure.
- BAS can shorten the braking distance.
- ABS prevents the wheels from locking.

The brakes will function as usual once you release the brake pedal. BAS is deactivated.

Function of ESP® (Electronic Stability Program)

WARNING Risk of skidding if ESP® is malfunctioning

If ESP® is malfunctioning, ESP® cannot carry out vehicle stabilization. In addition, other driving safety systems are switched off.

▶ Drive on carefully.

▶ Have ESP® checked at a qualified specialist workshop.

WARNING Risk of skidding if ESP® is deactivated

If you deactivate ESP®, ESP® cannot carry out vehicle stabilization.

▶ ESP® should only be deactivated in the following situations.

Mercedes-AMG vehicles: be sure to observe the notes in the Supplement. Otherwise, you may fail to recognize dangers.

ESP® can monitor and improve driving stability and traction in the following situations, within physical limits:

- When pulling away on a wet or slippery roadway.
- When braking.
- In strong side winds from approx. 50 mph (80 km/h).

If the vehicle deviates from the direction desired by the driver, ESP® can stabilize the vehicle by intervening in the following ways:

- One or more wheels are braked.
- The engine output is adapted according to the situation.

ESP® is deactivated if the ESP® OFF warning lamp lights up continuously in the instrument cluster:

- Driving stability will no longer be improved.
- Crosswind Assist is no longer active.
- The drive wheels could spin.
- ETS/4ETS traction control is still active.

ⓘ When ESP® is deactivated, you are still assisted by ESP® when braking.

If the ESP® warning lamp flashes in the instrument cluster, one or several vehicle wheels has reached its grip limit:

- Adapt your driving style to suit the current road and weather conditions.
- Do not deactivate ESP®.
- Only depress the accelerator pedal as far as is necessary when pulling away.

Deactivate ESP® in the following situations to improve traction:

- When using snow chains.
- In deep snow.
- On sand or gravel.

ⓘ Spinning the wheels results in a cutting action, which enhances traction.

If the ESP® warning lamp lights up continuously, ESP® is not available due to a malfunction.

Observe the following information:

- Warning and indicator lamps (→ page 541)
- Display messages (→ page 492)

ETS/4ETS (Electronic Traction System)

ETS/4ETS traction control is part of ESP® and makes it possible to pull away and accelerate on a slippery roadway.

ETS/4ETS can improve the vehicle's traction by intervening in the following ways:

- The drive wheels are braked individually if they spin.
- More drive torque is transferred to the wheel or wheels with traction.

Influence of drive programs on ESP®

The drive programs enable ESP® to adapt to different weather and road conditions as well as the driver's preferred driving style. You can select the drive programs using the DYNAMIC SELECT switch (→ page 183).

ESP® characteristics per drive program

Drive program	ESP® mode	Characteristics
S (Sport)	ESP® Sport	This drive program continues to offer stability but with a sporty setup which allows the enthusiastic driver a more active driving style. Select drive program S in good road conditions, for example on dry roads and clear stretches of road.
C (Comfort) **Vehicles with MAGIC BODY CONTROL:** CV (CURVE) E (Economy)	ESP® Comfort	These drive programs provide the ideal balance between traction and stability. Select drive program C, CV or E in difficult road conditions, such as snow or ice, or when the road is wet from rain.

Activating/deactivating ESP® (Electronic Stability Program)

Multimedia system:

→ Vehicle ▸▸ Assistance ▸▸ ESP

Mercedes-AMG vehicles: observe the notes in the Supplement. Otherwise, you may not recognize dangers.

▶ Activate ☑ or deactivate ☐ the function.

ESP® is deactivated if the ESP® OFF warning lamp lights up continuously in the instrument cluster.

Observe the information on warning lamps and display messages which may be shown in the instrument cluster.

Function of ESP® Crosswind Assist

ESP® Crosswind Assist detects sudden gusts of side wind and helps the driver to keep the vehicle in the lane:

- ESP® Crosswind Assist is active at vehicle speeds between approx. 50 mph (80 km/h)

and 125 mph (200 km/h) when driving straight ahead or cornering slightly.
- The vehicle is stabilized by means of individual brake application on one side.

Function of EBD (electronic brake force distribution)

EBD is characterized by the following:
- Monitoring and regulating the brake pressure on the rear wheels.
- Improved driving stability when braking, especially on bends.

Function of STEER CONTROL

STEER CONTROL helps you by transmitting a noticeable steering force to the steering wheel in the direction required for vehicle stabilization.

This steering recommendation is given particularly in the following situations:
- Both right wheels or both left wheels are on a wet or slippery road surface when you brake
- The vehicle starts to skid

System limits

STEER CONTROL may be impaired or may not function in the following situations:
- ESP® is deactivated.
- ESP® is malfunctioning.
- The steering is malfunctioning.

If ESP® is malfunctioning, you will be assisted further by the electric power steering.

Function of Active Brake Assist

Active Brake Assist consists of the following functions:
- Distance warning function
- Autonomous braking function
- Situation-dependent braking assistance
- **Vehicles with Driving Assistance Package:** Evasive Steering Assist

Active Brake Assist can help you to minimize the risk of a collision with vehicles or pedestrians or to reduce the effects of such a collision.

If Active Brake Assist has detected a risk of collision, a warning tone sounds and the distance warning lamp lights up in the instrument cluster.

If you do not react to the warning, autonomous braking can be initiated in critical situations.

In especially critical situations, Active Brake Assist can initiate autonomous braking directly. In this case, the warning lamp and warning tone occur simultaneously with the braking application.

If you apply the brake yourself in a critical situation or apply the brake during autonomous braking, situation-dependent braking assistance occurs. The brake pressure increases up to maximum full-stop braking if necessary.

If autonomous braking or situation-dependent braking assistance has occurred, display ① appears in the multifunction display and then automatically goes out after a short time.

If the autonomous braking function or the situation-dependent braking assistance is triggered, additional preventive measures for occupant protection (PRE-SAFE®) may also be initiated.

⚠ **WARNING** Risk of an accident caused by limited detection performance of Active Brake Assist

Active Brake Assist cannot always clearly identify objects and complex traffic situations.

In such cases, Active Brake Assist might:

- Give a warning or brake without reason
- Not give a warning or not brake

▶ Always pay careful attention to the traffic situation; do not rely on Active Brake Assist alone. Active Brake Assist is only an aid. The driver is responsible for maintaining a suitable distance to the vehicle in front, vehicle speed and for braking in good time.

▶ Be prepared to brake or swerve if necessary.

ⓘ If the system is unavailable, the OFF display appears in the multifunction display.

Also observe the system limits of Active Brake Assist.

The individual subfunctions are available in the following speed ranges:

The distance warning function issues a warning in the following situations:

- From approximately 4 mph (7 km/h), if your vehicle is critically close to a vehicle or pedestrian, you will hear an intermittent warning tone and the distance warning lamp lights up in the instrument cluster.

Brake immediately or take evasive action, provided it is safe to do so and the traffic situation allows this.

The distance warning function can aid you in the following situations with an intermittent warning tone and a warning lamp:

	Vehicles traveling in front	Stationary vehicles	Crossing vehicles	Moving pedestrians	Stationary pedestrians
Vehicles without Driving Assistance Package	Up to approx. 155 mph (250 km/h)	Up to approx. 50 mph (80 km/h)	No reaction	Up to approx. 37 mph (60 km/h)	No reaction
Vehicles with Driving Assistance Package	Up to approx. 155 mph (250 km/h)	Up to approx. 62 mph (100 km/h)	Up to approx. 43 mph (70 km/h)	Up to approx. 50 mph (80 km/h)	Up to approx. 43 mph (70 km/h)

The autonomous braking function may intervene at speeds starting from approximately 4 mph (7 km/h) in the following situations:

	Vehicles traveling in front	Stationary vehicles	Crossing vehicles	Moving pedestrians	Stationary pedestrians
Vehicles without Driving Assistance Package	Up to approx. 124 mph (200 km/h)	Up to approx. 31 mph (50 km/h)	No reaction	Up to approx. 37 mph (60 km/h)	No reaction
Vehicles with Driving Assistance Package	Up to approx. 155 mph (250 km/h)	Up to approx. 62 mph (100 km/h)	Up to approx. 43 mph (70 km/h)	Up to approx. 43 mph (70 km/h)	Up to approx. 43 mph (70 km/h)

Situation-dependent braking assistance may intervene at speeds starting from approximately 4 mph (7 km/h) in the following situations:

	Vehicles traveling in front	Stationary vehicles	Crossing vehicles	Moving pedestrians	Stationary pedestrians
Vehicles without Driving Assistance Package	Up to approx. 155 mph (250 km/h)	Up to approx. 50 mph (80 km/h)	No reaction	Up to approx. 37 mph (60 km/h)	No reaction
Vehicles with Driving Assistance Package	Up to approx. 155 mph (250 km/h)	Up to approx. 62 mph (100 km/h)	Up to approx. 43 mph (70 km/h)	Up to approx. 43 mph (70 km/h)	Up to approx. 43 mph (70 km/h)

Canceling a brake application of Active Brake Assist

You can cancel a brake application of Active Brake Assist at any time by:

- Fully depressing the accelerator pedal or with kickdown.
- Releasing the brake pedal.

Active Brake Assist may cancel the brake application when one of the following conditions is fulfilled:

- You maneuver to avoid the obstacle.
- There is no longer a risk of collision.
- An obstacle is no longer detected in front of your vehicle.

Evasive Steering Assist (only vehicles with Driving Assistance Package)

Evasive Steering Assist has the following characteristics:

- The ability to detect stationary or moving pedestrians.
- Assistance through power-assisted steering if it detects a swerving maneuver.
- Activation by an abrupt steering movement during a swerving maneuver.
- Assistance during swerving and straightening of the vehicle.
- Reaction from a speed of approximately 12 mph (20 km/h) up to a speed of approximately 43 mph (70 km/h).

You can prevent the assistance at any time by actively steering.

⚠ **WARNING** Risk of an accident despite Evasive Steering Assist

Evasive Steering Assist cannot always clearly identify objects and complex traffic situations.

In addition, the steering support of Evasive Steering Assist is generally not sufficient to avoid a collision.

In such cases Evasive Steering Assist can:

- give an unnecessary warning or provide assistance
- not give a warning or not provide assistance

▶ Always pay careful attention to the traffic situation; do not rely on Evasive Steering Assist alone.

▶ Be ready to brake and take evasive action if necessary.

▶ Prevent the assistance by actively steering in non-critical driving situations.

▶ Drive at an appropriate speed if pedestrians are close to the path of your vehicle.

System limits

Full system performance is not available for a few seconds after switching on the ignition or after driving off.

The system may be impaired or may not function in the following situations:

- In snow, rain, fog, heavy spray, if there is glare, in direct sunlight or in greatly varying ambient light.
- If the sensors are dirty, fogged up, damaged or covered.
- If the sensors are impaired due to interference from other radar sources, e.g. strong radar reflections in parking garages.
- If a loss of tire pressure or a faulty tire has been detected and displayed.
- In complex traffic situations where objects cannot always be clearly identified.
- If pedestrians or vehicles move quickly into the sensor detection range.
- If pedestrians are hidden by other objects.
- If the typical outline of a pedestrian cannot be distinguished from the background.
- If a pedestrian is not detected as such, e.g. due to special clothing or other objects.
- On bends with a tight radius.

ⓘ The Active Brake Assist sensors adjust automatically while a certain distance is being driven after the vehicle has been delivered. Active Brake Assist is unavailable or only partially available during this teach-in period.

Setting Active Brake Assist

Multimedia system:

→ Vehicle ▸▸ Assistance ▸▸ Active Brake Assist

Vehicles without Driving Assistance Package: The settings can be made after starting the vehicle.

Vehicles with Driving Assistance Package: The settings can be made when the ignition is switched on.

The following settings are available:

- Early
- Medium
- Late

▶ Select a setting.

ⓘ Your selection is retained when the vehicle is next started.

Deactivating Active Brake Assist

ⓘ It is recommended that you always leave Active Brake Assist activated.

▶ Select Off.
The distance warning function and the autonomous braking function are deactivated.

Vehicles without Driving Assistance Package: When the vehicle is next started, the medium setting is automatically selected.

Vehicles with Driving Assistance Package: Evasive Steering Assist is not available. When the ignition is next started, the medium setting is selected automatically and Evasive Steering Assist is available.

ⓘ If Active Brake Assist is deactivated, the OFF symbol appears in the status bar of the multifunction display.

Speed control cruise control

Function of cruise control

Cruise control regulates the speed to the value selected by the driver.

If you accelerate to overtake, for example, the stored speed is not deleted. If you remove your foot from the accelerator pedal after overtaking, cruise control will resume speed regulation back to the stored speed.

Cruise control is operated using the corresponding steering wheel buttons. You can store any speed above 15 mph (20 km/h) up to the maximum speed.

If you fail to adapt your driving style, cruise control can neither reduce the risk of an accident nor override the laws of physics. It cannot take into account road, weather or traffic conditions.

Cruise control is only an aid. The driver is responsible for the distance to the vehicle in front, for vehicle speed, for braking in good time and for staying in lane.

Mercedes-AMG vehicles: Cruise control is available up to a maximum speed of 155 mph (250 km/h).

Displays in the multifunction display

The status of cruise control and the stored speed are shown in the multifunction display.

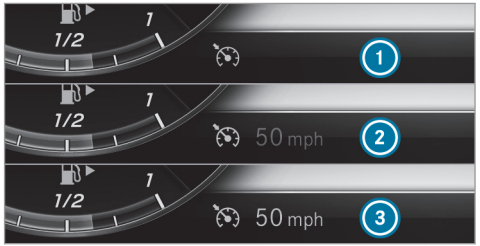

① Cruise control is selected
② Speed is saved, cruise control is deactivated
③ Speed is saved, cruise control is activated

ⓘ The segments between the stored speed and the end of the segment display light up in the speedometer.

System limits

Cruise control may be unable to maintain the stored speed on uphill gradients. The stored speed is resumed when the gradient evens out.

Change into a lower gear in good time on long and steep downhill gradients. Take particular note of this when driving a laden vehicle. By doing so, you will make use of the engine's braking effect. This relieves the load on the brake system and prevents the brakes from overheating and wearing too quickly.

Do not use cruise control in the following situations:

- In traffic situations which require frequent changes of speed, e.g. in heavy traffic, on winding roads.
- On slippery roads. Accelerating can cause the drive wheels to lose traction and the vehicle could then skid.
- If you are driving when visibility is poor.

Operating cruise control

⚠ **WARNING** Risk of accident due to stored speed

If you call up the stored speed and this is lower than your current speed, the vehicle decelerates.

▶ Take into account the traffic situation before calling up the stored speed.

Requirements:

- ESP® must be activated, but not intervening.
- The driven speed is at least 15 mph (20 km/h).
- The transmission is in position D.

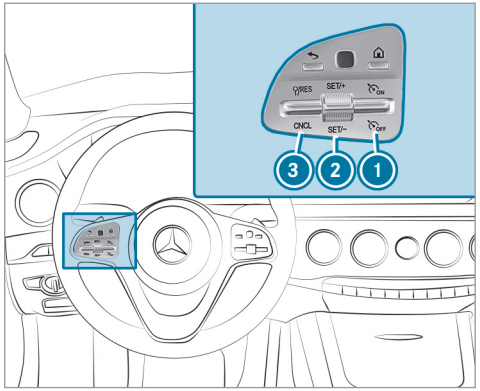

▶ **To activate cruise control:** press rocker switch ① up.

▶ **To activate cruise control:** press rocker switch ② up (SET+) or down (SET-).
The current speed is stored and maintained by the vehicle.

or

▶ Press rocker switch ③ up (RES).
The last stored speed is called up and maintained by the vehicle.

If the last stored speed has previously been deleted, the currently driven speed is stored.

ⓘ When you switch off the vehicle, the last speed stored is cleared.

▶ **To increase/reduce speed:** press rocker switch ② up (SET+) or down (SET-) to the pressure point.
The stored speed is increased or reduced by 1 mph (1 km/h).

or

▶ Press rocker switch ② up (SET+) or down (SET-) beyond the pressure point.
The stored speed is increased or reduced by 5 mph (10 km/h).

or

▶ Accelerate the vehicle to the desired speed.

▶ Press rocker switch ② up (SET+).

If cruise control is activated and Traffic Sign Assist has detected a speed restriction sign with a maximum permissible speed and this is displayed in the instrument cluster, you can choose between the following options:

▶ **To adopt the detected speed:** press rocker switch ③ up (RES).
The maximum permissible speed shown by the traffic sign is stored and the vehicle maintains this speed.

▶ **To deactivate cruise control:** press rocker switch ③ down (CNCL).

▶ **To switch off cruise control:** press rocker switch ① down.

ⓘ If you brake, deactivate ESP® or if ESP® intervenes, cruise control is deactivated.

Active Distance Assist DISTRONIC

Function of Active Distance Assist DISTRONIC

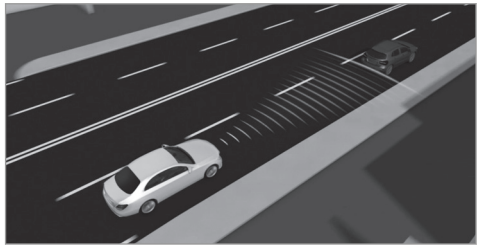

Active Distance Assist DISTRONIC maintains the set speed on free-flowing roads. If vehicles in front are detected, the set distance is maintained, if necessary, until the vehicle comes to a halt. The vehicle accelerates or brakes depending on the distance to the vehicle in front and the set speed. The speed and distance to the vehicle in front are set and saved on the steering wheel on vehicles without the Driving Assistance Package, in the range between 15 mph (20 km/h) and 120 mph (200 km/h) and, on

vehicles with the Driving Assistance Package, in the range between 15 mph (20 km/h) and 130 mph (210 km/h).

Other features of Active Distance Assist DISTRONIC:

- Adjusts the driving style depending on the selected drive program (fuel efficient, comfortable or dynamic) (→ page 183)
- **Vehicles with Driving Assistance Package:** reacts to stationary vehicles detected in urban speed ranges (except bicycles and motorcycles)
- Initiates acceleration to the stored speed if the turn signal indicator is switched on to change to the overtaking lane
- **Vehicles with Driving Assistance Package:** takes one-sided overtaking restrictions into account on highways or on multi-lane roads with separate roadways (country-dependent)

Vehicles with Active Parking Assist and Driving Assistance Package: if the vehicle has been braked to a standstill on multi-lane, separate roadways by Active Distance Assist DISTRONIC, it can automatically follow the vehicle in front driving off again within 30 seconds. If a critical situation is detected when driving off, a visual and acoustic warning is given indicating that the driver must now take control of the vehicle. The vehicle is not accelerated any further.

Active Distance Assist DISTRONIC is only an aid. The driver is responsible for keeping a safe distance to the vehicle in front, for vehicle speed and for braking in good time.

System limits

The system may be impaired or may not function in the following situations:

- In snow, rain, fog, heavy spray, if there is glare, in direct sunlight or in greatly varying ambient light.
- The windshield in the area of the camera is dirty, fogged up, damaged or covered.
- If the radar sensors are dirty or covered.
- In parking garages or on roads with steep uphill or downhill gradients.
- If there are narrow vehicles in front, such as bicycles or motorcycles.

In addition, on slippery roads, braking or accelerating can cause one or several wheels to lose traction and the vehicle could then skid.

Do not use Active Distance Assist DISTRONIC in these situations.

⚠ **WARNING** Risk of accident from acceleration or braking by Active Distance Assist DISTRONIC

Active Distance Assist DISTRONIC may accelerate or brake in the following cases, for example:

- If the vehicle pulls away using Active Distance Assist DISTRONIC.
- If the stored speed is called up and is considerably faster or slower than the currently driven speed.
- If Active Distance Assist DISTRONIC no longer detects a vehicle in front or does not react to relevant objects.

▶ Always carefully observe the traffic conditions and be ready to brake at all times.

▶ Take into account the traffic situation before calling up the stored speed.

⚠ **WARNING** Risk of accident due to insufficient deceleration by Active Distance Assist DISTRONIC

Active Distance Assist DISTRONIC brakes your vehicle with up to 50% of the maximum possible deceleration. If this deceleration is not sufficient, Active Distance Assist DISTRONIC alerts you with a visual and acoustic warning.

▶ In these cases, adjust your speed and keep a sufficient distance.

▶ Brake the vehicle yourself and/or take evasive action.

⚠ **WARNING** Risk of accident if detection function of Active Distance Assist DISTRONIC is impaired

Active Distance Assist DISTRONIC does not react or has a limited reaction:

- when driving on a different lane or when changing lanes
- to pedestrians, animals, bicycles or stationary vehicles, or unexpected obstacles
- to complex traffic conditions
- to oncoming vehicles and crossing traffic

As a result, Active Distance Assist DISTRONIC may neither give warnings nor intervene in such situations.

▶ Always observe the traffic conditions carefully and react accordingly.

Operating Active Distance Assist DISTRONIC Requirements:

- The vehicle has been started.
- The electric parking brake is released.
- ESP® is activated and is not intervening.
- The transmission is in position D.
- The driver's door is closed.
- Check of the radar sensor system has been successfully completed.
- Parking Assist PARKTRONIC is not being used to park the vehicle or to exit from a parking space.
- The vehicle does not skid.

Deactivating Active Distance Assist DISTRONIC:

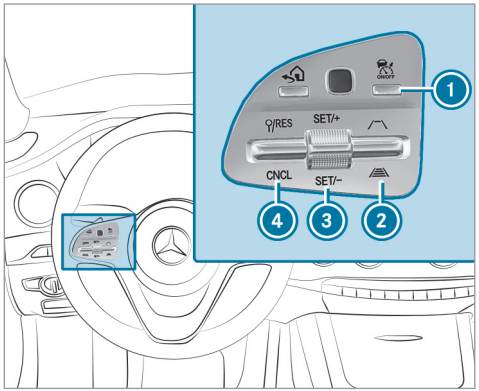

▶ Press button 1.

Activating Active Distance Assist DISTRONIC

▶ **To activate without a stored speed:** press rocker switch 3 up (SET+) or down (SET-), or press rocker switch 4 up (RES). Remove your foot from the accelerator pedal.
The current speed is stored and maintained by the vehicle.

or

▶ **To activate with a stored speed:** press rocker switch 4 up (RES). Remove your foot from the accelerator pedal.

ⓘ By pressing rocker switch 4 up again, the speed limitation shown in the instrument cluster will be adopted by Active Distance Assist DISTRONIC or variable limiter.

▶ **To accept the displayed speed restriction when Active Distance Assist DISTRONIC is active:** press rocker switch 4 up (RES).
The speed limit displayed in the instrument cluster is adopted as the stored speed. The vehicle adapts its speed to that of the vehicle in front, but only up to the stored speed.

Accepting the displayed speed restriction when Distance Assist DISTRONIC is activated

▶ Press rocker switch 4 up (RES).
The speed limit displayed in the instrument cluster is adopted as the stored speed. The vehicle adapts its speed to that of the vehicle in front, but only up to the stored speed.

Pulling away with Active Distance Assist DISTRONIC

▶ Remove your foot from the brake pedal and activate Active Distance Assist DISTRONIC.
▶ Press rocker switch 4 up (RES).

or

▶ Depress the accelerator pedal briefly and firmly.
The functions of Active Distance Assist DISTRONIC continue to be carried out.

Deactivating Active Distance Assist DISTRONIC

⚠ **WARNING** Risk of accident due to Active Distance Assist DISTRONIC still being activated when you leave the driver's seat

If you leave the driver's seat while the vehicle is being braked by Active Distance Assist DISTRONIC only, the vehicle can roll away.

▶ Always deactivate Active Distance Assist DISTRONIC and secure the vehicle to prevent it from rolling away before you leave the driver's seat.

▶ Press rocker switch ④ down (CNCL).

ⓘ If you brake, deactivate ESP® or if ESP® intervenes, Active Distance Assist DISTRONIC is deactivated.

Increasing or reducing the speed

▶ Press rocker switch ③ up (SET+) or down (SET-) to the pressure point.
The stored speed is increased or reduced by 1 mph (1 km/h).

or

▶ Press rocker switch ③ up (SET+) or down (SET-) to the pressure point and hold.
The stored speed is increased or reduced in increments of 1 mph (1 km/h).

or

▶ Press rocker switch ③ up (SET+) or down (SET-) beyond the pressure point.
The stored speed is increased or reduced by 5 mph (10 km/h).

or

▶ Press rocker switch ③ up (SET+) or down (SET-) and hold beyond the pressure point.
The stored speed is increased or reduced in increments of 5 mph (10 km/h).

Reducing or increasing the specified distance from the vehicle in front

▶ Press rocker switch ② up or down.

Function of Active Speed Limit Assist

ⓘ The following function is country-dependent and only available in conjunction with the Driving Assistance Package.

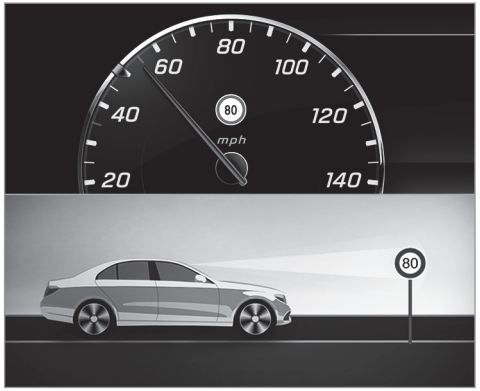

If a change in the speed limit is detected and automatic adoption of speed limits is activated, the new speed is automatically adopted as the stored speed (→ page 253).

The driven speed is adjusted when the vehicle is level with the traffic sign at the latest. In the case of signs indicating entry into an urban area, the speed is adapted according to the speed permitted within the urban area. The speed limit display in the Instrument Display is always updated when the vehicle is level with the traffic sign.

If there is no speed restriction on an unlimited stretch of road (e.g. on a freeway), the recommended speed is automatically adopted as the stored speed. The system uses the speed stored on an unlimited stretch of road as the recommended speed. If you do not alter the stored speed on an unlimited stretch of road, the recommended speed is 80 mph (130 km/h).

If Active Distance Assist DISTRONIC has been put into passive mode by pressing the accelerator pedal, only speed limits which are higher than the set speed are adopted.

Active Speed Limit Assist is only an aid. The driver is responsible for keeping a safe distance from the vehicle in front, for vehicle speed and for braking in good time. The maximum permissible speed also depends on factors such as the road surface and traffic conditions.

System limits

Temporary speed restrictions (e.g. for a certain time or due to weather conditions) cannot be properly detected by the system. The maximum permissible speed applying to a vehicle with a trailer is not detected by the system. In these situations you must adjust your speed yourself.

⚠ **WARNING** Risk of accident due to Active Speed Limit Assist adapting the vehicle's speed

The speed adopted by Active Speed Limit Assist may be too high or incorrect in some individual cases, such as:

- In the wet or in fog
- When towing a trailer

▶ Ensure that the driven speed complies with traffic regulations.

▶ Adjust the driving speed to suit current traffic and weather conditions.

Function of route-based speed adaptation

ⓘ The following function is country-dependent and only available in conjunction with the Driving Assistance Package.

When Active Distance Assist DISTRONIC is activated, the vehicle speed will be adjusted accordingly to the route events ahead. Depending on the drive program selected, the vehicle negotiates a route event ahead in a fuel-saving, comfortable or dynamic manner. When the route event has been passed, the vehicle accelerates again to the stored speed. The set distance to the vehicle in front, vehicles detected ahead and speed restrictions ahead are taken into account.

Route-based speed adaptation can be configured in the multimedia system (→ page 218).

The following route events are taken into account:

- Bends
- T-intersections, traffic circles and toll stations
- Turns and exits

ⓘ When the toll station is reached, Active Distance Assist DISTRONIC adopts the speed as the stored speed.

Also, the speed is reduced if the turn signal indicator to change lanes is switched on and one of the following situations is detected:

- Turning off at intersections
- Driving on slowing-down lanes
- Driving on lanes adjacent to slowing-down lanes

The driver is responsible for choosing the right speed and observing other road users. This applies in particular to intersections, traffic circles and traffic lights, as route-based speed adaptation does not brake the vehicle to a standstill.

When route guidance is active, the first speed adjustment is carried out automatically. If the turn signal indicator is switched on, the selected route is confirmed and further speed adjustment is activated.

Speed adjustment is canceled in the following cases:

- If the turn signal indicator is switched off before the route event.
- If the driver depresses the accelerator or brake pedal during the process.

System limits

Route-based speed adaptation does not take right of way regulations into account. The driver is responsible for complying with road traffic regulations and driving at a suitable speed.

In difficult conditions, for example unclear roads, lane narrowing, wet road surfaces, snow or ice, or when driving with a trailer, the speed adjustment made by the system may not always be suitable. In these situations the driver must intervene accordingly.

⚠ **WARNING** Risk of accident in spite of route-based speed adjustment

Route-based speed adjustment might malfunction or be temporarily unavailable in the following situations:

- If the driver does not follow the calculated route
- If map data is not up to date or available
- In road construction areas
- In bad weather or road conditions
- If the accelerator pedal is depressed
- In the event of electronically displayed speed limitations

▶ Adjust the speed to the traffic situation.

Setting route-based speed adjustment

Requirements:

- Active Distance Assist DISTRONIC is activated.

Multimedia system:

→ Vehicle ▸▸ Assistance ▸▸ Speed Adjustment

▶ Activate ☑ or deactivate ☐ the function.

Active Steering Assist

Function of Active Steering Assist

ⓘ The following function is country-dependent and only available in conjunction with the Driving Assistance Package.

Active Steering Assist is only available up to a speed of 130 mph (210 km/h). The system helps you to stay in the center of the lane by means of moderate steering interventions. Depending on the speed driven, Active Steering Assist uses the vehicles ahead and lane markings as a reference.

ⓘ Depending on the country, in the lower speed range Active Steering Assist can use the surrounding traffic as a reference. If necessary, Active Steering Assist can then also provide assistance when driving away from the center of the lane to form a rescue lane, for example.

When the system is actively steering, the symbol is shown in green in the multifunction display.

If the detection of lane markings and vehicles ahead is impaired, Active Steering Assist switches to passive mode. The system provides no support in this case. During the transition from active to passive status, the symbol is shown as enlarged and flashing. Once the system is passive, the symbol is shown as gray in the multifunction display.

Steering and touch detection

The driver is required to keep their hands on the steering wheel at all times and be able to intervene at any time to correct the course of the vehicle and keep it in lane. The driver must expect a change from active to passive mode or vice versa at any time.

If the system detects that the driver has not steered the vehicle for a considerable period of time or has removed their hands from the steering wheel, an optical warning is given first. Display 1 appears in the multifunction display. If the driver still does not steer the vehicle, or gives no confirmation to the system, a warning tone sounds in addition to the visual warning message.

The warning is not issued, or is stopped, when the driver gives confirmation to the system:

- The driver steers the vehicle.
- The driver presses a steering wheel button or operates Touch Control.

If Active Steering Assist detects that a system limit has been reached, a visual warning is issued and a warning tone sounds.

Active Steering Assist is only an aid. The driver is responsible for the distance to the vehicle in front, for vehicle speed, for braking in good time and for staying in lane. Before changing lanes, the driver must make sure that the neighboring lane is free (glance over the shoulder).

System limits
Active Steering Assist has a limited steering torque for lateral guidance. In some cases, the steering intervention is not sufficient to keep the vehicle in the lane or to drive through exits.

The system may be impaired or may not function in the following instances:

- There is poor visibility, e.g. due to snow, rain, fog, heavy spray, greatly varying ambient light or strong shadows on the roadway.
- There is glare, e.g. from oncoming traffic, direct sunlight or reflections.
- Insufficient road illumination.
- The windshield is dirty, fogged up, damaged or covered in the vicinity of the camera, e.g. by a sticker.
- No, or several unclear, lane markings are present for one lane, or the markings change quickly, e.g. in a construction area or at intersections.
- The lane markings are worn away, dark or covered up, e.g. by dirt or snow.
- The distance to the vehicle in front is too small and the lane markings thus cannot be detected.
- The road is narrow and winding.
- There are obstacles on the lane or projecting out into the lane, such as object markers.

The system does not provide assistance in the following conditions:

- On tight bends and when turning.
- When crossing intersections.
- At traffic circles or toll stations.
- When actively changing lane without switching on the turn signal indicator.
- When the tire pressure is too low.

Depending on the selected vehicle settings, Active Steering Assist may be unavailable. Observe the status display of Active Steering Assist in the multifunction display (→ page 223).

WARNING Risk of accident if Active Steering Assist unexpectedly stops functioning

If the system limits of Active Steering Assist are reached there is no guarantee that the system will remain active or will keep the vehicle in lane.

▶ Always keep your hands on the steering wheel and observe the traffic carefully.

▶ Always steer the vehicle paying attention to traffic conditions.

WARNING Risk of accident if Active Steering Assist unexpectedly intervenes

A malfunction in the detection of lane markings and objects can occur.

This could cause unexpected steering intervention.

▶ Steer according to traffic conditions.

Activating Active Steering Assist
Requirements

- ESP® must be activated, but not intervening.
- Active Distance Assist DISTRONIC is activated.

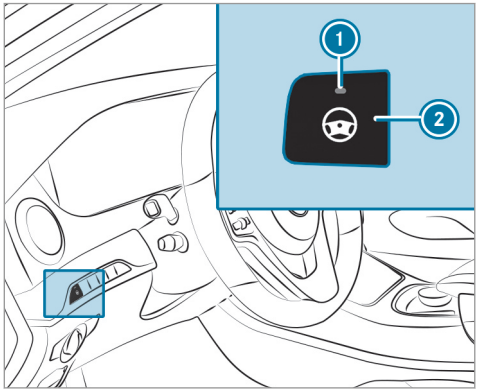

▶ If indicator lamp 1 is off: press button 2.

Function of Active Lane Change Assist

ⓘ The following function is country-dependent and only available in conjunction with the Driving Assistance Package.

Active Lane Change Assist supports the driver when changing lanes by applying steering torque if the driver operates a turn signal indicator.

Assistance when changing lanes is provided if all the following conditions are met:

- You are driving on a freeway or road with multiple lanes in the direction of travel.
- The neighboring lane is separated by a broken lane marking.
- No vehicle is detected in the adjacent lane.
- The driven speed is between 50 mph (80 km/h) and 110 mph (180 km/h).
- Active Lane Change Assist is switched on in the multimedia system.
- Active Steering Assist is switched on and active.

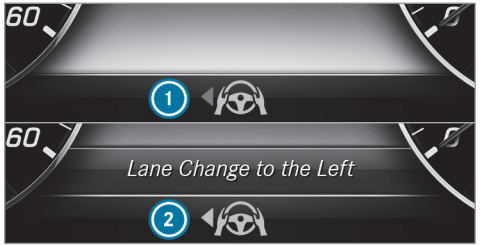

If no vehicle is detected in the adjacent lane and a lane change is permitted, the lane change begins after the driver has activated the turn signal indicator. This is shown to the driver with a green arrow 2 next to the steering wheel symbol. The Lane Change to the Left message also appears, for example. If Active Lane Change Assist has been activated with the turn signal indicator but a lane change is not immediately possible, a gray arrow 1 appears next to the steering wheel symbol, which remains green.

When the lane change assistance starts, the turn signal indicator is automatically activated along with the display in the multifunction display.

If a lane change is not possible, the arrow fades out after a few seconds and a new lane change must be initiated. An immediate lane change is only possible on freeway sections without speed limits.

If the system is impaired, Active Lane Change Assist may be canceled. If it is canceled, the Lane Change Canceled message appears in the multifunction display and a warning tone sounds.

WARNING Risk of accident from changing lane to an occupied adjacent lane

Lane Change Assist cannot always detect clearly if the adjacent lane is free.

The lane change might be initiated although the adjacent lane is not free.

- Before changing lanes, make sure that the neighboring lane is free and there is no danger to other road users.
- Monitor the lane change.

WARNING Risk of accident if Lane Change Assist unexpectedly stops functioning

If the system limitations for Lane Change Assist have been reached, there is no guarantee that the system will remain active.

Lane Change Assist cannot then assist you by applying steering torques.

- Always monitor the lane change and keep your hands on the steering wheel. Observe the traffic conditions and steer and/or brake if necessary.

System limits

The system limitations of Active Steering Assist apply to Active Lane Change Assist (→ page 219).

The system may also be impaired or may not function in the following situations:

- The sensors in the rear bumper are dirty, damaged or covered by a sticker or ice and snow, for example.
- The exterior lighting shows a fault.

ⓘ The Active Lane Change Assist sensors adjust automatically while a certain distance is being driven after the vehicle has been delivered. Active Lane Change Assist is unavailable or only partially available during this teach-in process; no arrow appears next to the Active Steering Assist symbol when the turn signal indicator is activated.

Activating/deactivating Active Lane Change Assist

Multimedia system:

→ Vehicle ▸▸ Assistance

- Select Lane Change Assist.
- Activate ☑ or deactivate ☐ the function.

Function of Active Emergency Stop Assist

If the driver continually ignores the visual or acoustic warning to put their hands on the steering wheel, the Beginning Emergency Stop message appears in the multifunction display. If the driver still does not respond, Active Distance Assist DISTRONIC reduces the speed. The vehicle is decelerated in stages to a standstill.

Depending on the country, at speeds below 40 mph (60 km/h) the hazard warning lights switch on automatically.

When the vehicle is stationary, the following actions are carried out:

- The vehicle is secured with the electric parking brake
- Active Distance Assist DISTRONIC is ended
- The vehicle is unlocked
- If possible, an emergency call is placed to the Mercedes-Benz emergency call center

The driver can cancel the deceleration at any time by performing one of the following actions:

- Steering
- Braking or accelerating
- Pressing a steering-wheel button
- Operating Touch Control
- Activating or deactivating Active Distance Assist DISTRONIC

Overview of Active Distance Assist DISTRONIC displays in the instrument cluster

The assistance graphic and the status display show the status of the following functions in the instrument cluster:

- Active Distance Assist DISTRONIC
- Route-based speed adaptation
- Active Steering Assist

Assistant display

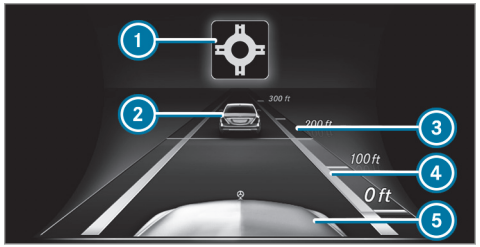

1. Route-based speed adaptation: type of route event
2. Vehicle in front
3. Distance indicator
4. Set specified distance
5. Own vehicle

Active Distance Assist DISTRONIC status display and route-based speed adaptation

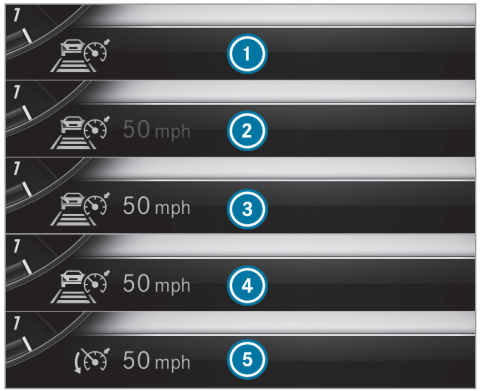

1. Active Distance Assist DISTRONIC selected, set specified distance (number of segments below the vehicle)
2. Active Distance Assist DISTRONIC deactivated, speed stored
3. Active Distance Assist DISTRONIC active, speed stored, no vehicle detected (bright vehicle symbol)
4. Active Distance Assist DISTRONIC active, speed stored, vehicle detected (green vehicle symbol)
5. Active Distance Assist DISTRONIC and route-based speed adaptation active, speed stored

ⓘ On highways or high-speed major roads, the green vehicle symbol is displayed cyclically when the vehicle is ready to pull away.

ⓘ If you depress the accelerator pedal beyond the setting of the Active Distance Assist DISTRONIC, the system is switched to passive mode. The Suspended message appears in the multifunction display.

Speedometer

The stored speed is highlighted on the speedometer. If the speed of the vehicle in front or the speed adjustment is less than the stored speed due to the route event ahead, the segments in the speedometer light up. Deactivation of Active Distance Assist DISTRONIC, as well as alterations to the speed due to manual or automatic adoption of the speed limit, are displayed in the control feedback of the multifunction display on a single line.

Active Steering Assist status display

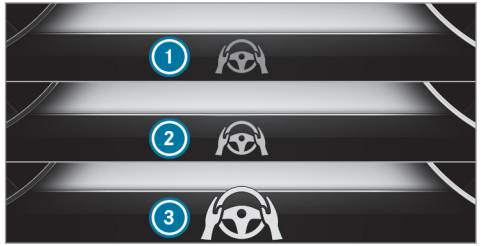

1. Gray steering wheel: Active Steering Assist switched on and passive
2. Green steering wheel: Active Steering Assist switched on and active
3. Flashing steering wheel: prompt to the driver to actively confirm or transition from active to passive status, system limits detected

During the transition from active to passive status, symbol 3 is shown as enlarged and flash-

ing. Once the system is passive, symbol ① is shown as gray in the multifunction display.

Function of Hill Start Assist

Hill Start Assist holds the vehicle for a short time when pulling away on a hill under the following conditions:

- The transmission is in position D or R.
- The electric parking brake is released.

This gives you enough time to move your foot from the brake pedal to the accelerator pedal and depress it before the vehicle begins to roll away.

WARNING Risk of accident and injury due to the vehicle rolling away

After a short time, Hill Start Assist no longer holds the vehicle and it can roll away.

▶ Therefore, swiftly move your foot from the brake pedal to the accelerator pedal. Never attempt to leave the vehicle if it is being held by Hill Start Assist.

HOLD function

HOLD function

The HOLD function holds the vehicle at a standstill without requiring you to depress the brake pedal, e.g. while waiting in traffic.

The HOLD function is only an aid. The responsibility for the vehicle safely standing still remains with the driver.

System limits

The HOLD function is only intended to provide assistance when driving and is not a sufficient means of safeguarding the vehicle against rolling away when stationary.

- The incline must not be greater than 30%.

Activating/deactivating the HOLD function

WARNING Risk of an accident due to the HOLD function being activated when you leave the vehicle

If you leave the vehicle while only the HOLD function is braking the vehicle, the vehicle can roll away in the following situations:

- If there is a malfunction in the system or in the power supply.
- If the HOLD function is deactivated by depressing the accelerator pedal or brake pedal, e.g. by a vehicle occupant.

▶ Always deactivate the HOLD function and secure the vehicle against rolling away before leaving the vehicle.

! NOTE Damage from automatic braking

If one of the following functions is switched on, the vehicle brakes automatically in certain situations:

- Active Brake Assist
- Active Distance Assist DISTRONIC
- HOLD function
- Active Parking Assist

To avoid damage to the vehicle, deactivate these systems in the following or similar situations:

▶ During towing
▶ In a car wash

Requirements:

- The vehicle is stationary.
- The driver's door is closed or the seat belt on the driver's side is fastened.
- The engine is running or has been automatically switched off by the ECO start/stop function.
- The electric parking brake is released.
- Active Distance Assist DISTRONIC is deactivated.
- The transmission is in position D, R or N.

Activating the HOLD function

▶ Depress the brake pedal and after a short time quickly depress further until the HOLD display appears in the multifunction display.
▶ Release the brake pedal.

Deactivating the HOLD function

▶ Depress the accelerator pedal to pull away.

or

▶ Depress the brake pedal until the HOLD display disappears from the multifunction display.

The HOLD function is deactivated in the following situations:

- Active Distance Assist DISTRONIC is activated.
- The transmission is switched to position P.
- The vehicle is secured with the electric parking brake.

In the following situations, the vehicle is held by transmission position P and/or by the electric parking brake:

- The seat belt is unfastened and the driver's door is opened.
- The vehicle is switched off.
- There is a malfunction in the system or the power supply is insufficient.

AIRMATIC

Function of AIRMATIC

AIRMATIC is an air suspension system with variable damping for improved driving comfort. The all-round level control system ensures the best possible suspension and constant ground clearance, even with a laden vehicle. When driving at speed, the vehicle is lowered automatically to improve driving safety and to reduce fuel consumption. You also have the option of manually adjusting the vehicle level.

AIRMATIC includes the following components and functions:

- air suspension with automatic all-round level control
- speed-dependent lowering to reduce fuel consumption
- manually selectable high-level setting for greater ground clearance
- ADS PLUS (Adaptive Damping System with constant damping force adjustment)
- DYNAMIC SELECT switch and level button

Available suspension settings

Drive program	Characteristics
S (Sport)	• The suspension tuning is firmer. • The vehicle is set to the low level. • The vehicle is not lowered any further if you are traveling at higher speeds. • When driving at speeds below 50 mph (80 km/h) the vehicle is raised again.
C (Comfort) E (Economy)	• The suspension tuning is comfortable. • The vehicle is set to the normal level. • When driving at speeds above 77 mph (125 km/h) the vehicle is lowered. • When driving at speeds below 50 mph (80 km/h) the vehicle is raised again. • When driving at speeds above 100 mph (160 km/h) the vehicle continues to be lowered. • When driving at speeds between 75 mph (120 km/h) and 100 mph (160 km/h) the vehicle is raised again.

Setting the vehicle level

WARNING Risk of accident because vehicle level is too high

If you drive at a higher vehicle level, the driving characteristics may be impaired due to the higher vehicle center of gravity.

The vehicle can drift outwards, for example, when steering or cornering.

▶ Always choose a vehicle level which is suited to the driving style and the road surface conditions.

WARNING Risk of entrapment from vehicle lowering

When lowering the vehicle, people could become trapped if their limbs are between the vehicle body and the tires or underneath the vehicle.

▶ Make sure no one is underneath the vehicle or in the immediate vicinity of the wheel arches when the vehicle is being lowered.

WARNING Risk of entrapment from vehicle lowering

Vehicles with AIRMATIC or level control: When you unload luggage or leave the vehicle, the vehicle first rises slightly and then returns to the set level shortly afterwards.

You or anyone else in the vicinity of the wheel arches or the underbody could thus become trapped.

The vehicle can also be lowered after being locked.

▶ When leaving the vehicle, make sure that nobody is in the vicinity of the wheel arches or the underbody.

NOTE Damage due to vehicle lowering

Parts of the body could be damaged when the vehicle is lowered.

▶ Make sure that there are no obstacles such as curbs underneath or in the immediate vicinity of the body when the vehicle is being lowered.

Requirements:

- The vehicle has been started.
- The vehicle must not be moving faster than 50 mph (80 km/h).

Raising the vehicle

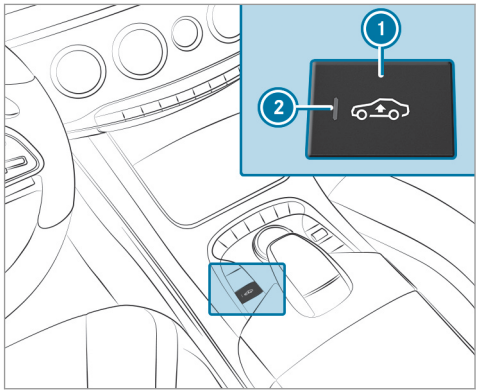

▶ Press button ①.
Indicator lamp ② lights up.

The vehicle is set to the high level.

Your selection is saved.

The vehicle is lowered again in the following situations:

- When driving faster than 75 mph (120 km/h).
- When driving between 50 mph (80 km/h) and 75 mph (120 km/h) for approximately three minutes.
- After selecting a drive program using the DYNAMIC SELECT switch.

The vehicle is adjusted to the height of the last active drive program.

Lowering the vehicle

▶ Press button ①.
Indicator lamp ② goes out. The vehicle is adjusted to the height of the last active drive program.

MAGIC BODY CONTROL

MAGIC BODY CONTROL function

MAGIC BODY CONTROL is an electrohydraulic suspension with variable damping for improved driving comfort. The all-round level control system ensures the best possible suspension and constant ground clearance, even with a laden vehicle. When driving at speed, the vehicle is lowered automatically to improve driving safety and to reduce fuel consumption. The suspension tuning is adjusted depending on the road surface, vehicle load and the drive program selected. The ROAD SURFACE SCAN function detects areas of unevenness in the road before you drive over them by means of a multifunction camera. This reduces chassis movements. You also have the option of manually adjusting the vehicle level.

The damping is tuned individually for each wheel and is affected by the following factors:

- The driving style, e.g. sporty
- The road condition, e.g. bumps
- The individual selection of the drive program: S (Sport), C (Comfort), CV (CURVE) or E (Economy)

MAGIC BODY CONTROL includes the following components and functions:

- Active Body Control ABC
- ROAD SURFACE SCAN
- Curve inclination function CURVE
- Automatic level control system
- Automatic vehicle stabilization in the event of sidewinds
- Speed-dependent lowering to reduce fuel consumption
- Manually selectable high-level setting for greater ground clearance
- DYNAMIC SELECT switch and level button

Available suspension settings

Drive program	Characteristics
S (Sport)	• The suspension tuning is firmer. • When driving at speeds between 40 mph (65 km/h) and 87 mph (140 km/h) the vehicle is lowered steadily and remains at this level up to the maximum vehicle speed. • When returning to speeds between 87 mph (140 km/h) and 40 mph (65 km/h) the vehicle is raised again. • ROAD SURFACE SCAN is deactivated.
C (Comfort)	• The suspension tuning is comfortable. • The vehicle is set to the normal level. • ROAD SURFACE SCAN is active.
CV (CURVE)	• The suspension tuning is comfortable. • The vehicle is set to the normal level. • The curve inclination function is active. • ROAD SURFACE SCAN is active.
E (Economy)	• The suspension tuning is comfortable. • The vehicle is set to the normal level. • ROAD SURFACE SCAN is deactivated.

Crosswind Assist

Crosswind stabilization has the following characteristics:

- The stabilization operates by changing wheel loads through adjusting the ABC spring struts.
- Disruptions when driving straight ahead are reduced.
- Countersteering is supported.
- Crosswind Assist is active at vehicle speeds between 50 mph (80 km/h) and 130 mph (210 km/h) when driving straight ahead or cornering slightly.

Function of ROAD SURFACE SCAN

ⓘ This function is not available in all countries.

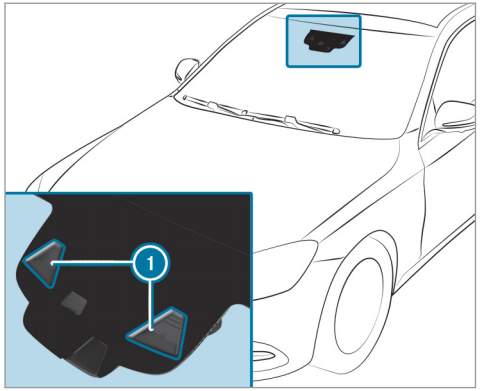

The ROAD SURFACE SCAN function monitors the road in front of your vehicle using a multifunction camera ①. ROAD SURFACE SCAN detects unevenness in the road surface, e.g. bumps, before the vehicle drives over them. Chassis movements are reduced and driving comfort is increased.

ROAD SURFACE SCAN is automatically activated if the following conditions are met:

- Drive program C (Comfort) or CV (CURVE) is selected.
- The vehicle is set to the normal level.
- You are driving at a speed between 4 mph (7 km/h) and 112 mph (180 km/h).

System limits

ROAD SURFACE SCAN can be impaired in the following situations or can stop functioning:

- If the roadway is insufficiently lit, e.g. at night.
- In snow, rain, fog, heavy spray, if there is glare, in direct sunlight or in greatly varying ambient light.
- If the windshield in the area of multifunction camera ① is dirty, fogged up, damaged or covered.
- If the road surface has no optic structure or reflects light.
- If you are driving too close to the vehicle in front.

- If sections of the route have a very small radius of curvature.
- During abrupt driving maneuvers, e.g. heavy braking or sudden acceleration.

Observe the notes on cleaning the multifunction camera (→ page 421).

Setting the vehicle level

⚠ **WARNING** Risk of accident because vehicle level is too high

If you drive at a higher vehicle level, the driving characteristics may be impaired due to the higher vehicle center of gravity.

The vehicle can drift outwards, for example, when steering or cornering.

▶ Always choose a vehicle level which is suited to the driving style and the road surface conditions.

⚠ **WARNING** Risk of entrapment from vehicle lowering

When lowering the vehicle, people could become trapped if their limbs are between the vehicle body and the tires or underneath the vehicle.

▶ Make sure no one is underneath the vehicle or in the immediate vicinity of the wheel arches when the vehicle is being lowered.

⚠ **WARNING** Risk of becoming trapped due to the vehicle lowering

Vehicles with AIR BODY CONTROL or level control system: when you unload luggage or leave the vehicle, the vehicle first rises slightly and then returns to the set level shortly afterwards.

You or anyone else in the vicinity of the wheel arches or the underbody could thus become trapped.

The vehicle can also be lowered after being locked.

▶ When leaving the vehicle, make sure that nobody is in the vicinity of the wheel arches or the underbody.

Requirements:

- The vehicle has been started.
- The vehicle must not be moving faster than 75 mph (120 km/h).
- **Only lower the vehicle:** when the vehicle is stationary, all the doors have to be closed.

Raising the vehicle

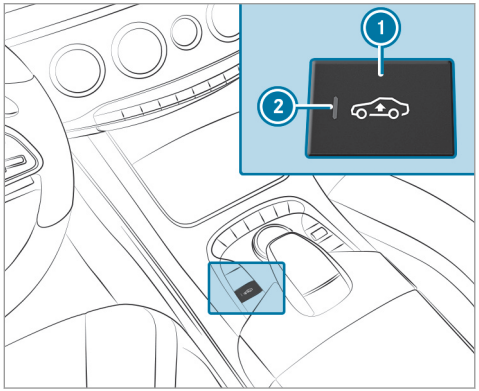

▶ Press button ①.
Indicator lamp ② lights up.
The vehicle is set to the high level.

Your selection is saved.

The vehicle is lowered again in the following situations:

- When driving faster than 75 mph (120 km/h).
- When driving between 50 mph (80 km/h) and 75 mph (120 km/h) for approximately three minutes.
- After selecting a drive program using the DYNAMIC SELECT switch.

The vehicle is adjusted to the height of the last active drive program.

Lowering the vehicle

▶ Press button ①.
Indicator lamp ② goes out. The vehicle is adjusted to the height of the last active drive program.

Parking Assist PARKTRONIC

Function of Parking Assist PARKTRONIC

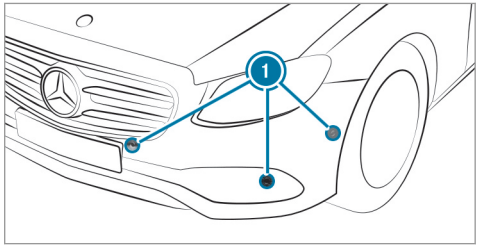

Parking Assist PARKTRONIC is an electronic parking assistance system with ultrasound. It monitors the area around your vehicle using multiple sensors ① on the front bumper and on the rear bumper. Parking Assist PARKTRONIC shows you the distance between your vehicle and a detected obstacle visually and audibly.

Parking Assist PARKTRONIC is only an aid. It is not a substitute for your attention to the surroundings. The responsibility for safe maneuvering and parking remains with you. Make sure that there are no persons, animals or objects in

the maneuvering area while maneuvering and parking in/exiting parking spaces.

In the standard setting, an intermittent warning tone sounds from a distance of approximately 1.0 ft (0.3 m) to an obstacle in front and approximately 3.3 ft (1.0 m) to an obstacle behind. A continuous warning tone sounds from a distance of approximately 0.7 ft (0.2 m). Using the Warn Early setting in the multimedia system, the warning tones for front and side impact protection can be set to sound at a greater distance of approximately 3.3 ft (1.0 m) in front and 2.0 ft (0.6 m) on the sides (→ page 238).

ⓘ The Warn Early setting is always active for the rear of the vehicle.

If Parking Assist PARKTRONIC is deactivated, Active Parking Assist is unavailable.

Parking Assist PARKTRONIC display in the multimedia system

Vehicles with Active Parking Assist without a 360° Camera

Vehicles with Active Parking Assist and a 360° Camera

If Active Parking Assist is deactivated and an obstacle is detected in the path of the vehicle, a pop-up window for Parking Assist PARKTRONIC ① appears in the multimedia system at speeds below 6 mph (10 km/h).

The color of the individual segments of the warning display is based on the distance to the detected obstacle:

- **Yellow segments:** obstacles at a distance between approx. 2.0 ft (0.6 m) and 3.3 ft (1.0 m)

- **Orange segments:** obstacles at a distance between approx. 1.0 ft (0.3 m) and 2.0 ft (0.6 m)
- **Red segments:** obstacles at a very short distance of approx. 1.0 ft (0.3 m) or less

System limits

Parking Assist PARKTRONIC does not necessarily take into account the following obstacles:

- Obstacles below the detection range, e.g. persons, animals or objects.
- Obstacles above the detection range, e.g. overhanging loads, overhangs or loading ramps of trucks.

The sensors must be free of dirt, ice and slush. Otherwise, they may not function correctly. Clean the sensors regularly, taking care not to scratch or damage them.

Problems with Parking Assist PARKTRONIC

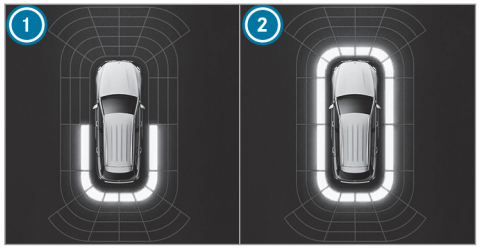

Vehicles without 360° Camera

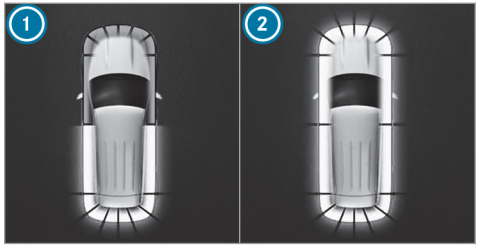

Vehicles with 360° Camera

Problem	Possible causes/consequences and ▶ Solutions
Rear segments ① or all-round segments ② light up red. The P OFF sym-	Parking Assist PARKTRONIC is malfunctioning and has been deactivated due to signal interference. ▶ Start the vehicle again. ▶ Check if Parking Assist PARKTRONIC is working at a different location.

Problem	Possible causes/consequences and ▶ Solutions
bol appears in the multifunction display.	
Rear segments ① or all-round segments ② light up red. At the same time, a warning tone sounds for approximately two seconds every time the vehicle is started. The [P OFF] symbol appears in the multifunction display.	The sensors are dirty. ▶ Clean the sensors and observe the notes on care of vehicle parts (→ page 421).
	Parking Assist PARKTRONIC has been deactivated due to a malfunction. ▶ Start the vehicle again. ▶ If the problem persists, consult a qualified specialist workshop.

Function of the passive side impact protection

Passive side impact protection is an additional Parking Assist PARKTRONIC function which warns the driver about obstacles at the side of the vehicle. A warning is issued when obstacles are detected between the front and rear detection range. In order for an object on the side to be detected, the sensors in the front and rear bumper must first detect the object while you are driving past it.

During the parking procedure or maneuvering, objects are detected as the vehicle drives past. If you steer in the direction of a detected obstacle and there is a risk of a lateral collision, a warning is issued. The segments on the sides light up yellow or red, depending on the distance to the obstacle.

Segment color depending on distance

Color	Lateral distance
Yellow	Approx. 1.0 - 2.0 ft (30 - 60 cm)
Red	Approx. < 1.0 ft (30 cm)

In order for lateral front or rear segments to be displayed, the vehicle must first travel a distance of at least half of the vehicle length. Once the vehicle has traveled the length of the vehicle, all

of the lateral front and rear segments can be displayed.

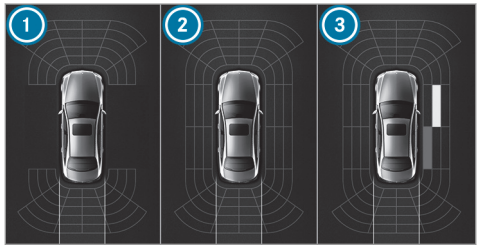

Parking Assist PARKTRONIC display: vehicles without a 360° Camera

1. Operational front and rear
2. Operational front, rear and sides
3. Obstacle detected at the front right (yellow) and rear (red)

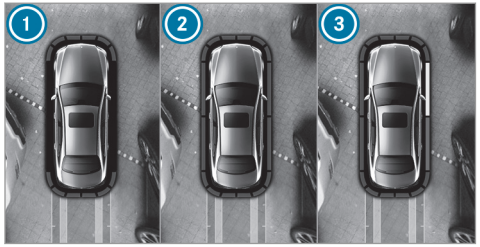

Parking Assist PARKTRONIC display: vehicles with a 360° Camera

1. Operational front and rear
2. Operational front, rear and sides
3. Obstacles detected at the front right (red)

Saved obstacles on the sides are deleted in the following situations, for example:

- You park the vehicle and switch off the ignition.
- You open the doors.

After the engine is restarted, obstacles on the sides must be detected again before a new warning can be issued.

System limits

The system limits for Parking Assist PARKTRONIC apply to passive side impact protection.

The following objects are not detected, for example:

- Pedestrians who approach the vehicle from the side
- Objects placed next to the vehicle

Deactivating/activating Parking Assist PARKTRONIC

! **NOTE** Risk of an accident from objects at close range

Parking Assist PARKTRONIC may not detect certain objects at close range.

▶ When parking or maneuvering the vehicle, pay particular attention to any objects which are above or below the sensors, e.g. flower pots or drawbars. The vehicle or other objects could otherwise be damaged.

If indicator lamp ② is not lit, Parking Assist PARKTRONIC is active. If the indicator lamp is lit and the P OFF symbol appears in the multifunction display, Parking Assist PARKTRONIC is not active.

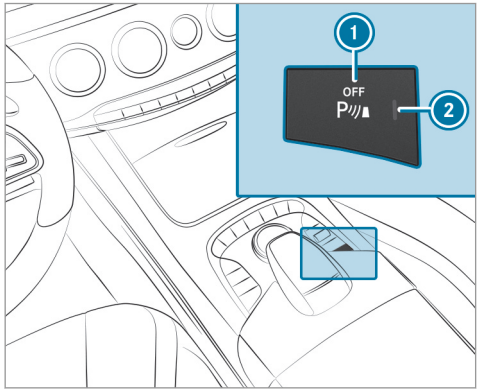

▶ Press button ①.

ⓘ Parking Assist PARKTRONIC is automatically activated when the vehicle is started.

Adjusting the warning tones of Parking Assist PARKTRONIC

Multimedia system:

→ Vehicle ▸▸ Assistance ▸▸ Camera & Parking ▸▸ Set Warning Tones

Adjusting the volume of the warning tones

▶ Select Warning Tone Volume.

▶ Set a value.

Adjusting the pitch of the warning tones

▶ Select Warning Tone Pitch.
Set a value.

Specifying the starting point for the warning tones

You can specify whether the Parking Assist PARKTRONIC warning tones should commence when the vehicle is further away from an obstacle.

▶ Select Warn Early.

▶ Activate ☑ or deactivate ☐ the function.

Activating/deactivating audio fadeout

You can specify whether the volume of a media source in the multimedia system is to be reduced when Parking Assist PARKTRONIC gives an audible warning.

▶ Select Audio Fadeout During Warning Tones.

▶ Activate ☑ or deactivate ☐ the function.

Reversing camera

Function of the rear view camera

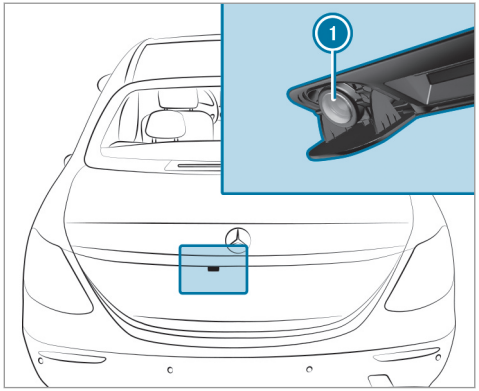

When you engage reverse gear, the image from rear view camera 1 is shown in the multimedia system. Dynamic guide lines show the path the vehicle will take with the steering wheel in its current position. This helps you to orient yourself and to avoid obstacles when backing up.

The rear view camera is only an aid. It is not a substitute for your attention to the surroundings. The responsibility for safe maneuvering and parking remains with you. Make sure that there are no persons, animals or objects etc., in the maneuvering area while maneuvering and parking.

The guide lines in the media display show the distances to your vehicle. The distances displayed only apply to road level.

You can select from the following views:

- Normal view
- Wide-angle view

The area behind the vehicle is displayed as a mirror image, as in the inside rearview mirror.

Camera views in the multimedia system

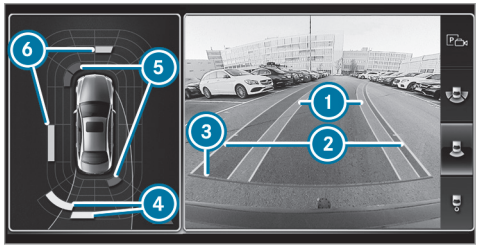

Normal view

1. Yellow lane marking the course the tires will take at the current steering wheel angle (dynamic)
2. Yellow guide line, vehicle width (driven surface) depending on the current steering wheel angle (dynamic)
3. Red guide line at a distance of approximately 1.0 in (0.3 m) from the rear area
4. Yellow warning indicator of Parking Assist PARKTRONIC: obstacles at a distance between approximately 2.0 ft (0.6 m) and 3.3 ft (1.0 m)

⑤ Red warning display of Parking Assist PARKTRONIC: obstacles are very close (approximately 1.0 ft (0.3 m) or less)

⑥ Orange warning display of Parking Assist PARKTRONIC: obstacles are a medium distance away (between approximately 1.0 ft (0.3 m) and 2.0 ft (0.6 m))

ⓘ If the entire system fails, the inner segments of the warning display are shown in red. The indicator lamp on the PARKTRONIC button lights up and the P OFF symbol appears in the multifunction display.
If the system fails at the rear, the rear segments are shown in red when backing up and are hidden when driving forwards.
When Active Parking Assist is active, the lane markings are displayed in green.
If Parking Assist PARKTRONIC is deactivated, the warning display fades out.

Wide-angle view

System failure

If there is no operational readiness, the following message appears in the multimedia system:

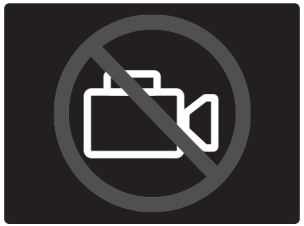

System limits

The rear view camera will not function or will only partially function in the following situations:

- The trunk lid is open.
- There is heavy rain, snow or fog.
- The ambient light conditions are poor, e.g. at night.
- The camera lens is obstructed, dirty or fogged up. Observe the notes on cleaning the rear view camera (→ page 421).
- Cameras, or vehicle components in which the cameras are installed, are damaged. In this event, have the cameras, their positions and their setting checked at a qualified specialist workshop.

The field of vision and other functions of the rear view camera may be restricted due to additional accessories on the rear of the vehicle (e.g. license plate bracket or bicycle rack).

ⓘ The display contrast may be impaired due to incident sunlight or other light sources. In this case, pay particular attention.

ⓘ Have the display repaired or replaced if, for example, pixel errors considerably restrict its use.

360° camera

Function of the 360° Camera

The 360° Camera is a system that consists of four cameras. The cameras cover the immediate vehicle surroundings. The system assists you, e.g. when parking or at exits with reduced visibility.

The views of the 360° Camera are always available when driving forwards up to a speed of approx. 10 mph (16 km/h) and when backing up.

The 360° Camera is only an aid. It is not a substitute for your attention to the surroundings. The responsibility for safe maneuvering and parking remains with you. Make sure that there are no persons, animals or objects etc., in the maneuvering area while maneuvering and parking.

The system evaluates images from the following cameras:

- Rear view camera
- Front camera
- Two side cameras in the outside mirrors

Views of the 360° Camera

You can select from different views:

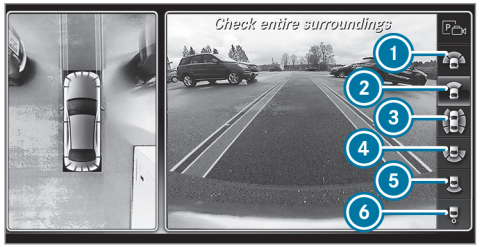

1. Wide-angle view, front
2. Top view with image from the front camera
3. Top view with images from the side cameras in the outside mirrors
4. Wide-angle view, rear
5. Top view with image from the rear view camera
6. Top view with trailer view (vehicles with a trailer hitch)

Top view

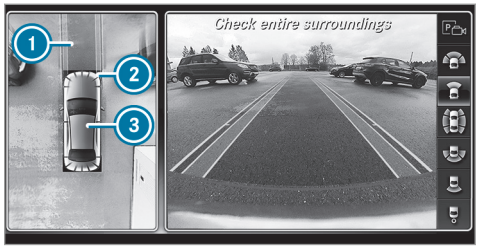

1. Lane indicating the route the vehicle will take at the current steering wheel angle
2. Yellow warning display of Parking Assist PARKTRONIC: obstacles at a distance of approximately 3.3 ft (1.0 m) or less
3. Your vehicle from above

If the distance to the object lessens, the color of warning display 2 changes. From a distance of

approximately 2.0 ft (0.6 m) the warning display is shown in orange. From a distance of approximately 1.0 ft (0.3 m) the warning display is shown in red.

When Parking Assist PARKTRONIC is operational and no object is detected, the segments of the warning display are shown in gray.

ⓘ If the entire system fails, the segments of the warning display are shown in red. The indicator lamp on the PARKTRONIC button lights up and the [P OFF] symbol appears in the multifunction display.

If the system fails at the rear, the display of the segments changes as follows:

- The rear segments are shown in red when backing up.
- The rear segments are hidden when driving forwards.

If Parking Assist PARKTRONIC is deactivated, the warning display fades out (→ page 235).

Guide lines

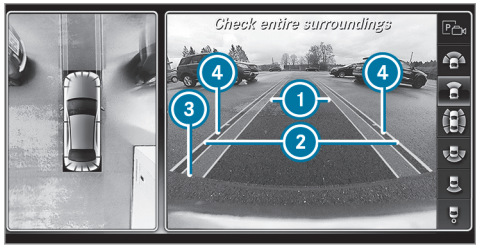

① Yellow lane marking the course the tires will take at the current steering wheel angle (dynamic)

② Yellow guide line, vehicle width (driven surface) depending on the current steering wheel angle (dynamic)

③ Red guide line at a distance of approximately 1.0 in (0.3 m) from the rear area

④ Mark at a distance of approx. 3.3 ft (1.0 m)

ⓘ When Active Parking Assist is active, the lane markings are displayed in green.

The guide lines in the multimedia system display show the distances to your vehicle. The distances only apply to road level.

Side view of the mirror cameras

The sides of the vehicle can be seen in this view.

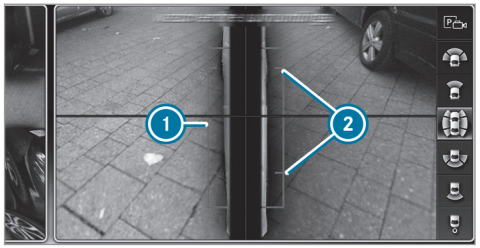

① Guide line of external vehicle dimensions with outside mirrors folded out

② Marker of the wheel contact points

System failure

If there is no operational readiness, the following message appears in the media display:

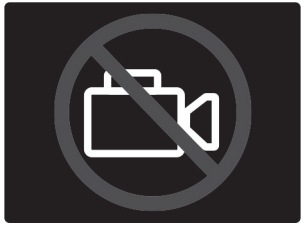

System limits

The 360° Camera will not function or will only partially function in the following situations:

- The doors are open.
- The side mirrors are folded in.
- The trunk lid is open.
- There is heavy rain, snow or fog.
- The ambient light conditions are poor, e.g. at night.
- The camera lens is obstructed, dirty or fogged up.
- If cameras or vehicle components in which the cameras are installed are damaged. In this event, have the cameras, their positions and their setting checked at a qualified specialist workshop.

Do not use the 360° Camera under such circumstances. You could otherwise injure others or collide with objects when parking or maneuvering the vehicle.

On vehicles with height-adjustable suspension or if the vehicle is carrying a heavy load, leaving the standard height can result in inaccuracies in the guide lines and in the display of the generated images, depending on technical conditions.

The field of vision and other functions of the camera system may be restricted due to additional attachments on the vehicle (e.g. license plate bracket, bicycle rack).

ⓘ The contrast of the display may be impaired by abrupt direct sunlight or by other light sources, e.g. when driving out of a garage. In this case, pay particular attention.

ⓘ Have the display repaired or replaced if, for example, pixel errors considerably restrict its use.

See the notes on cleaning the 360° Camera (→ page 421).

Selecting a view for the 360° Camera
Requirements:

- The Auto. Rear View Cam. function is selected in the multimedia system.

▶ Engage reverse gear.

▶ In the multimedia system, select the desired view.

Opening the camera cover of the rear view camera

Multimedia system:

→ Vehicle ▸▸ Assistance ▸▸ Camera & Parking

▶ Select Open Camera Cover.

ⓘ The camera cover closes automatically after some time or after an ignition cycle.

Setting the camera as a favorite

You can call up the camera view directly in the multimedia system by setting it as a favorite.

- Press the [⌂] button on the control element.
  The main functions are displayed.
- Navigate downwards twice.
  The Favorites menu appears.
- Select New Favorite.
- Select Vehicle.
- Select Camera.

Active Parking Assist

Function of Active Parking Assist

Active Parking Assist is an electronic parking assistance system which uses ultrasound and is automatically activated during forward travel. The system is operational at speeds of up to approximately 22 mph (35 km/h). When all the conditions are fulfilled, the [P] symbol appears in the multifunction display in the instrument cluster and the system automatically searches for and measures parking spaces on both sides of the vehicle parallel and perpendicular to the direction of travel. If Active Parking Assist is activated, suitable parking spaces are shown in the display of the multimedia system. The [P] symbol appears in the display of the multimedia system. The arrows show on which side of the roadway free parking spaces are located.

The parking space and, if necessary, the parking direction can be selected as desired. Active Parking Assist calculates a suitable vehicle path and assists you in parking and exiting the parking space.

Active Parking Assist provides assistance when changing gear, accelerating, braking and steering the vehicle.

Active Parking Assist is only an aid. It is not a substitute for your attention to the surroundings. The responsibility for safe maneuvering and parking remains with you. Make sure that no persons, animals or objects etc. are in the maneuvering range.

Active Parking Assist is canceled if, among other things, one of the following actions is carried out:

- You deactivate Parking Assist PARKTRONIC.
- You deactivate Active Parking Assist.
- You begin steering.
- You apply the parking brake.
- You engage transmission position [P].
- ESP® intervenes.
- You open the doors or the trunk lid while driving.

System limits

Objects located above or below the detection range of Active Parking Assist are not detected when the parking space is being measured. These are also not taken into account when the parking maneuver is calculated, e.g. overhanging loads, overhangs or loading ramps of trucks or the boundaries of parking spaces. In some circumstances, Active Parking Assist may therefore guide you into the parking space prematurely.

WARNING Risk of accident due to objects located above or below the detection range of Active Parking Assist

If there are objects above or below the detection range, the following situations may arise:

- Active Parking Assist may steer too early.
- **Vehicles with automatic transmission:** The vehicle may not stop in front of these objects.

This could cause a collision.

▶ In these situations, do not use Active Parking Assist.

Snowfall or heavy rain may lead to a parking space being measured inaccurately. Parking spaces that are partially occupied by trailer drawbars might not be identified as such or be measured incorrectly. Only use Active Parking Assist on level, high-grip ground.

Do not use Active Parking Assist in the following situations:

- In extreme weather conditions such as ice, packed snow or in heavy rain.
- When transporting a load that protrudes beyond the vehicle.
- If the parking space is on a steep downhill or uphill gradient.
- When snow chains are installed.

Active Parking Assist may also display parking spaces that are not suitable for parking, e.g.:

- Parking spaces where parking is prohibited.
- Parking spaces on unsuitable surfaces.

Active Parking Assist will not assist you with parking spaces at right angles to the direction of travel in the following situations:

- If two parking spaces are located immediately next to each other.
- If the parking space is immediately next to a low obstacle such as a curb.

Active Parking Assist will not assist you with parking spaces parallel or at right angles to the direction of travel in the following situations:

- If the parking space is on a curb.
- If the parking space is bordered by an obstacle, e.g. a tree, a post or a trailer.

Parking with Active Parking Assist

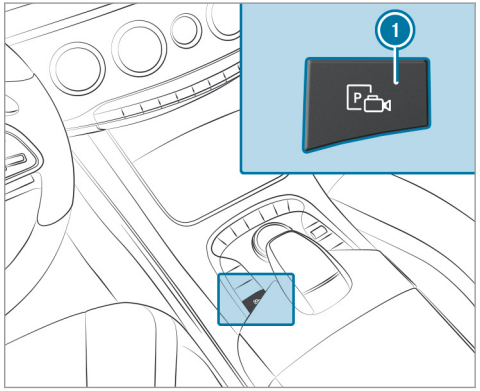

▶ Press button ①.

The media display shows the view of Active Parking Assist. Area ② displays detected parking spaces ④ and vehicle path ③.

ⓘ Vehicle path ③ shown on the media display may differ from the actual vehicle path.

▶ If you have driven past a parking space: bring the vehicle to a standstill.

▶ Select desired parking space ④.

▶ Where necessary, select the parking direction: forwards or reverse.
Vehicle path ③ is shown, depending on selected parking space ④ and the parking direction.

▶ Confirm selected parking space ④.

ⓘ The turn signal indicator is switched on automatically when the parking procedure begins. The turn signal indicator is switched off automatically when you switch to D.

You are responsible for selecting the turn signal indicator in accordance with the traffic conditions. If necessary, select the turn signal indicator accordingly.

⚠ **WARNING** Risk of accident due to vehicle swinging out while parking or pulling out of a parking space

While parking or exiting a parking space, the vehicle swings out and can drive onto areas of the oncoming lane.

This could cause you to collide with objects or other road users.

▶ Pay attention to objects and other road users.

▶ Where necessary, stop the vehicle or cancel the parking procedure with Active Parking Assist.

▶ If, for example, the Please Engage Reverse Gear message appears in the media display: select the corresponding transmission position.
The vehicle drives into the selected parking space.

On completion of the parking procedure, the Parking Assist Finished, Take Control of Vehicle display message appears. Further maneuvering may still be necessary.

▶ After completion of the parking procedure, safeguard the vehicle against rolling away. When required by legal requirements or local conditions: turn the wheels towards the curb.

ⓘ You can stop the vehicle and change the transmission position during the parking procedure. The system then calculates a new vehicle path. The parking procedure can then be continued. If no new vehicle path is available, the transmission position will be changed again. If the vehicle has not yet reached the parking space, the parking procedure will be canceled, should a gear be changed.

Exiting a parking space with Active Parking Assist
Requirements:

- The vehicle has been parked with Active Parking Assist.

Please note that you are responsible for the vehicle and surroundings during the entire parking procedure.

▶ Start the vehicle.

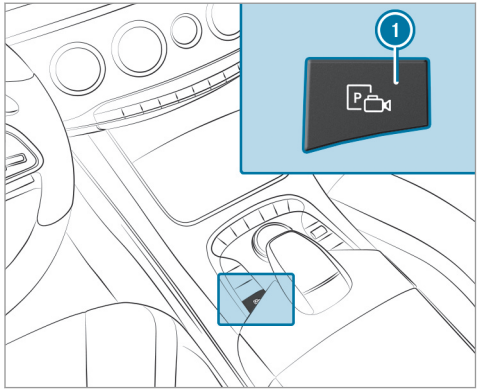

▶ Press button ①.
The media display shows the view of Active Parking Assist.

▶ If the vehicle has been parked at right angles to the direction of travel: in area ②, select direction of travel ③.

ⓘ The vehicle path shown on the media display may differ from the actual vehicle path.

▶ Confirm direction of exit ③ to drive out of the parking space.

ⓘ The turn signal indicator is switched on automatically when the exiting procedure begins.

You are responsible for selecting the turn signal indicator in accordance with the traffic conditions. If necessary, select the turn signal indicator accordingly.

⚠ **WARNING** Risk of accident due to vehicle swinging out while parking or pulling out of a parking space

While parking or exiting a parking space, the vehicle swings out and can drive onto areas of the oncoming lane.

This could cause you to collide with objects or other road users.

- ▶ Pay attention to objects and other road users.
- ▶ Where necessary, stop the vehicle or cancel the parking procedure with Active Parking Assist.

▶ If, for example, the Please Engage Forward Gear message appears in the media display: select the corresponding transmission position.
The vehicle moves out of the parking space. The turn signal indicator is switched off automatically.

After the exiting procedure has been completed, the Parking Assist Finished, Take Control of Vehicle message appears in the media display. A warning tone and the following display in the media display prompt you to take over control of the vehicle:

You have to accelerate, brake, steer and change gear yourself again.

Function of Drive Away Assist

Drive Away Assist can reduce the severity of an impact when pulling away. If an obstacle is detected in the direction of travel, the vehicle's speed is briefly reduced to approx. 1 mph (2 km/h). If a critical situation is detected, the LIM symbol appears in the media display.

⚠ **WARNING** Risk of accident caused by limited detection performance of Drive Away Assist

Drive Away Assist cannot always clearly identify objects and traffic situations.

In such cases, Drive Away Assist might:

- Warn you without reason and limit the vehicle speed.
- Not warn you or not limit the vehicle speed.

- ▶ Always pay careful attention to the traffic situation; do not rely on Drive Away Assist alone.
- ▶ Be prepared to brake or swerve as necessary, provided the traffic situation permits and that it is safe to take evasive action.

Drive Away Assist is only an aid. It is not a substitute for your attention to the surroundings. The responsibility for safe maneuvering and parking remains with you. Make sure that no persons, animals or objects etc. are in the maneuvering range.

A risk of a collision may arise in the following situations, for example:

- If the driver mixes up the accelerator and brake pedals.

- If the wrong gear is selected.

Drive Away Assist is active under the following conditions:

- If Parking Assist PARKTRONIC is activated.
- Every time the gear is changed to R or D when the vehicle is at a standstill.
- If the detected obstacle is less than approx. 3.3 ft (1.0 m) away.
- If the maneuvering assistant function is activated in the multimedia system.

System limits

The performance of Drive Away Assist is limited on inclines.

ⓘ Also observe the system limits of Parking Assist PARKTRONIC (→ page 233).

Function of Cross Traffic Alert

ⓘ Also read the instructions on Blind Spot Assist (→ page 256).

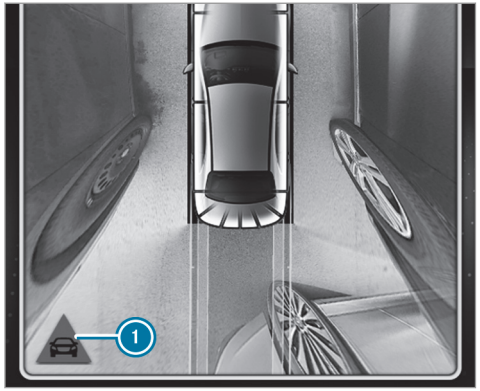

Vehicles with Blind Spot Assist: Cross Traffic Alert can warn drivers of any crossing traffic when backing up out of a parking space. The radar sensors in the bumper also monitor the area adjacent to the vehicle. If a critical situation is detected, symbol 1 appears in the media display. If the driver does not respond to the warning, the vehicle's brakes can be applied automatically.

If the radar sensors are obstructed by vehicles or other objects, detection is not possible.

Cross Traffic Alert is active under the following conditions:

- If Blind Spot Assist is activated.
- If the vehicle is backing up at walking pace.
- If the maneuvering assistant function is activated in the multimedia system.

System limits

Cross Traffic Alert is not available on inclines.

ⓘ Also observe the system limits of Active Blind Spot Assist (→ page 256).

Deactivating/activating maneuvering assistance

Multimedia system:

Vehicle ▸▸ Assistance ▸▸ Camera & Parking ▸▸ Maneuvering Assist.

▶ Activate ☑ or deactivate ☐ the function.

ⓘ Maneuvering assistance must be active for the function of Drive Away Assist (→ page 248) and Cross Traffic Alert (→ page 249).

ATTENTION ASSIST

Function of ATTENTION ASSIST

ATTENTION ASSIST assists you on long, monotonous journeys, e.g. on highways and trunk roads. If ATTENTION ASSIST detects indicators of fatigue or increasing lapses in concentration on the part of the driver, it suggests taking a break.

ATTENTION ASSIST is only an aid. It cannot always detect fatigue or lapses in concentration in time. The system is not a substitute for a well-rested and attentive driver. On long journeys, take regular breaks in good time that allow for adequate recuperation.

You can choose between two settings:

- **Standard:** normal system sensitivity.
- **Sensitive:** higher system sensitivity. The driver is warned earlier and the attention level detected by ATTENTION ASSIST is adapted accordingly.

If drowsiness or increasing lapses in concentration are detected, the ATTENTION ASSIST: Take a Break! warning appears in the Instrument Display. You can acknowledge the message and take a break where necessary. If you do not take a break and ATTENTION ASSIST continues to detect increasing lapses in concentration, you will be warned again after a minimum of 15 minutes.

You can have the following status information for ATTENTION ASSIST displayed in the assistance menu of the on-board computer:

- The length of the journey since the last break.
- The attention level determined by ATTENTION ASSIST.

If ATTENTION ASSIST is unable to calculate the attention level and cannot issue a warning, the System Suspended message appears.

If a warning is given in the Instrument Display, the multimedia system offers to search for a rest area. You can select a rest area and start navigation to this rest area. This function can be activated and deactivated in the multimedia system.

If ATTENTION ASSIST is deactivated, the symbol appears in the assistance graphic in the Instrument Display when the engine is running. ATTENTION ASSIST is activated automatically when the engine is re-started. The last selected sensitivity level remains stored.

System limits

ATTENTION ASSIST is active in the 37 mph (60 km/h) to 124 mph (200 km/h) speed range.

The functionality of ATTENTION ASSIST is restricted, and warnings may be delayed or not occur at all in the following situations:

- If you have been driving for less than approximately 30 minutes.

- If the road condition is poor (uneven road surface or potholes).
- If there is a strong side wind.
- If you adopt a sporty driving style (high cornering speeds or high rates of acceleration).
- If the Steering Assist function of Active Distance Assist DISTRONIC is active.
- If the time has been set incorrectly.
- In active driving situations, if you change lanes and vary your speed frequently.

The ATTENTION ASSIST tiredness or alertness assessment is deleted and restarted when continuing the journey in the following situations:

- If you switch off the engine.
- If you unfasten your seat belt and open the driver's door (e.g. changing drivers or taking a break).

Setting ATTENTION ASSIST

Multimedia system:

Vehicle ▸▸ Assistance ▸▸ ATTENTION ASSIST

Setting options

▶ Select Standard, Sensitive or Off.

Suggesting a rest area

▶ Select Suggest Rest Area.

▶ Activate ☑ or deactivate the function ☐. If ATTENTION ASSIST detects fatigue or increasing lack of attention, it suggests a rest area in the vicinity.

▶ **Select a suggested rest area:** you are guided to the selected rest area.

Traffic Sign Assist

Function of Traffic Sign Assist

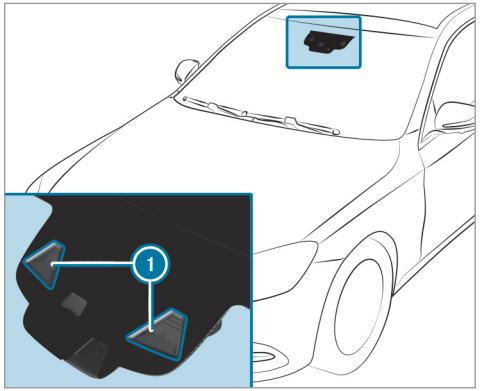

Since Traffic Sign Assist also uses the data stored in the navigation system, it can update the display in the following situations without detecting traffic signs:

- When the vehicle changes roads, e.g. on a highway entry or exit road.

- When a village or city boundary which is stored in the digital map is passed.

The camera also detects traffic signs with a restriction indicated by an additional sign (e.g. in wet conditions).

Traffic Sign Assist is only an aid. The driver is responsible for keeping a safe distance from the vehicle in front, for vehicle speed and for braking in good time.

Warning when the maximum permissible speed is exceeded

The system can warn you if you unintentionally exceed the maximum permissible speed. To do this, you can specify in the multimedia system by how much the maximum permissible speed can be exceeded before a warning is issued. You can specify whether the warning is to be just a visual warning or an acoustic one as well.

Display in the Instrument Display

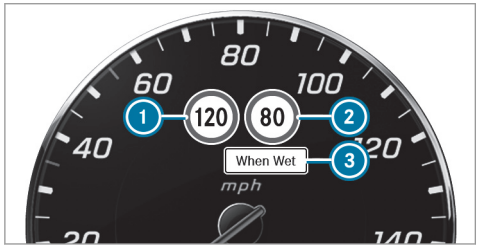

Instrument Display in the Widescreen Cockpit

1. Permissible speed
2. Permissible speed when there is a restriction
3. Additional sign with restriction

ⓘ **Vehicles with a standard Instrument Display:** a **+** symbol next to a traffic sign in the Instrument Display indicates that additional traffic signs have been detected. These can also be displayed in the media display and optionally in the head-up display.

Traffic Sign Assist is not available in all countries. If it is unavailable, display 1 is shown in the speedometer.

System limits

The system may be impaired or may not function in the following situations:

- If there is poor visibility, e.g. due to insufficient illumination of the road, if there are highly variable shade conditions or in rain, snow, fog or heavy spray.
- If there is glare, e.g. from oncoming traffic, direct sunlight or reflections.

- If the windshield in the area of the multifunction camera is dirty, or if the camera is fogged up, damaged or covered.
- If the traffic signs are hard to detect, e.g. due to dirt or snow, or because they are covered or due to insufficient lighting.
- If the information in the navigation system's digital map is incorrect or out-of-date.
- If the signs are ambiguous, e.g. traffic signs on construction sites or in adjacent lanes.
- If you turn sharply, when passing traffic signs outside the camera's field of vision.

Setting Traffic Sign Assist
Requirements:

- **For automatic adoption of speed limits:** Active Distance Assist DISTRONIC is activated.

Multimedia system:
→ Vehicle ▸▸ Assistance
▸▸ Traffic Sign Assist

Activating/deactivating automatic adoption of speed limits

▶ Select Limit Adoption.
▶ Activate ☑ or deactivate ☐ the function. The speed limits detected by Traffic Sign Assist are automatically adopted by Active Distance Assist DISTRONIC.

Displaying detected traffic signs in the media display

▶ Select Display in COMAND.
▶ Activate ☑ or deactivate ☐ the function.

ⓘ If one of the following systems is activated, the speed detected can be manually adopted as the speed limit:

- Active Distance Assist DISTRONIC
- Cruise control

Further information (→ page 214).

Adjusting the type of warning

▶ Select Visual & Audible, Visual or None.

Adjusting the warning threshold
This value determines the speed at which a warning is issued when exceeded.

▶ Select Warning Threshold.
▶ Set the desired speed.

Night View Assist

Function of Night View Assist

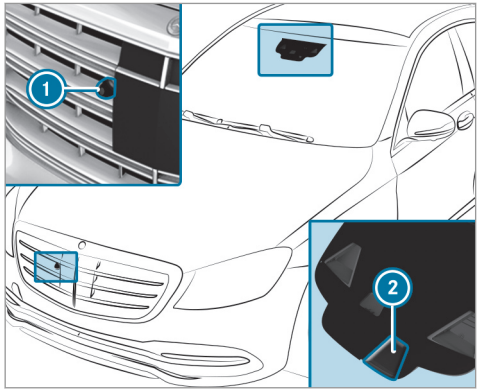

With the aid of camera ②, Night View Assist helps you to recognize the course of the road or obstacles in the dark. The multifunction display then shows a monochrome image of the surrounding area in front of the vehicle. Infrared camera ① helps detect pedestrians and animals.

Night View Assist is only an aid. The driver is responsible for the distance to the vehicle in front, for vehicle speed, for braking in good time and for staying in lane.

ⓘ As infrared light is not visible to the human eye, Night View Assist can remain activated when there is oncoming traffic.
The infrared headlamps switch on in the dark from speeds of approximately 5 mph (10 km/h). This means that, while stationary, you do not have the full visual range and cannot check whether Night View Assist is working.

System limitations

Night View Assist cannot display objects directly in front of or directly next to the vehicle. It may be the case that objects are highlighted as well as pedestrians or animals.

The system may be impaired or may not function in the following instances:

- in poor visibility, e.g. snow, rain, fog or heavy spray.
- the windshield is dirty in the vicinity of the camera.
- the camera is fogged up, damaged or covered.
- the infrared camera in the radiator grill is damaged, dirty, fogged up or covered.
- on bends, on hilltops or in dips.
- at high ambient temperatures.

Function of pedestrian and animal detection of Night View Assist

Night View Assist can detect pedestrians using typical characteristics, e.g. the body contours and posture of a person standing upright.

Large animals, e.g. deer, cows or horses, can also be detected. Smaller animals, e.g. dogs or cats, are not detected.

Pedestrian and animal detection is automatically switched on when the following requirements are fulfilled:

- Night View Assist is activated.
- The driving speed is at least 5 mph (10 km/h).

- It is dark.

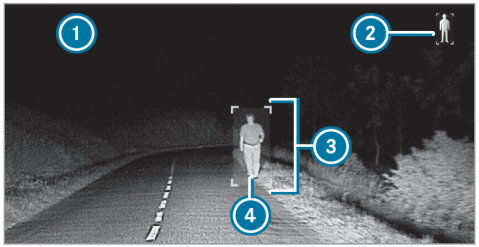

① Night View Assist display
② Standby symbol for active pedestrian detection
③ Highlighting
④ Pedestrian detected

If pedestrian detection is active, standby symbol ② appears. There is no separate symbol for animals. Detected pedestrians or animals are highlighted by a color frame.

Activating or deactivating Night View Assist
Requirements:

- The vehicle has been started or the ignition is switched on.
- The light switch is in the AUTO or position.
- Reverse gear has not been engaged.

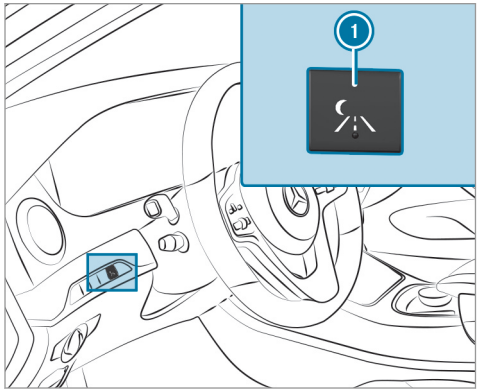

▶ Press button ①.
The appropriate Night View Assist display appears in the multifunction display.

ⓘ The infrared headlamps are deactivated at speeds below 3 mph (5 km/h). The Night View image continues to be displayed until you switch it off by pressing button ①.

Switching automatic activation on/off
Requirements:

- Pedestrian detection is active (→ page 254).
- The roadway is not lit.
- The speed is at least 37 mph (60 km/h).

If all the requirements are fulfilled, the night vision image is automatically shown in the multifunction display as soon as people or animals are detected.

Multimedia system:

→ Vehicle ▸▸ Assistance
▸▸ Aut. Night View Assist

▶ Activate ☑ or deactivate ☐ the function.

Spotlight function
The spotlight function is an additional function for Night View Assist. It runs in the background and flashes the headlamps at detected persons

with four short impulses. This attracts the driver's attention to approaching pedestrians.

Display in the assistance graphic

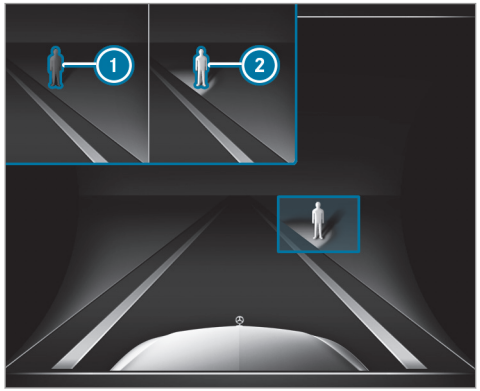

1. Spotlight function switched on but not operating
2. Spotlight function switched on and operating

The pedestrian symbol in the assistance graphic indicates the status of the spotlight function. If the pedestrian symbol is displayed dark (1), the function is switched on. If the symbol is displayed bright (2), the conditions for the Spotlight function are also fulfilled.

System limitations

The spotlight function does not flash at animals.

The spotlight function is not active or is active only to a limited extent if:

- You are driving in city traffic.
- The pedestrians are located in the area of an oncoming vehicle or a vehicle in front.

Activating/deactivating the spotlight function

Requirements:

- Pedestrian detection is active (→ page 254).
- The roadway is not lit.
- The speed is at least 37 mph (60 km/h).
- Adaptive Highbeam Assist Plus is switched on.

If all the requirements are fulfilled, the headlamp flashes four short pulses at a pedestrian detected on or near to the roadway.

Multimedia system:

Vehicle ▸▸ ▸▸ Light Settings ▸▸ Spotlight

▶ Activate ☑ or deactivate ☐ the function.

Blind Spot Assist and Active Blind Spot Assist

Function of Blind Spot Assist and Active Blind Spot Assist

Blind Spot Assist uses two lateral, rear-facing radar sensors to monitor the area up to 130 ft (40 m) behind your vehicle and 10 ft (3 m) directly next to your vehicle.

If a vehicle is detected at speeds above approximately 8 mph (12 km/h) and this vehicle subsequently enters the monitoring range directly next to your vehicle, the warning lamp in the outside mirror lights up red.

If a vehicle is detected close to your vehicle in the lateral monitoring range and you switch on

the turn signal indicator in the corresponding direction, a warning tone sounds once. The red warning lamp in the outside mirror flashes. If the turn signal indicator remains switched on, all other detected vehicles are indicated only by the flashing of the red warning lamp.

If you overtake a vehicle quickly, no warning is given.

⚠ **WARNING** Risk of accident despite Blind Spot Assist

Blind Spot Assist does not react to vehicles approaching and overtaking you at a greatly different speed.

As a result, Blind Spot Assist cannot warn drivers in this situation.

▶ Always pay careful attention to the traffic situation and maintain a safe distance at the side of the vehicle.

Blind Spot Assist and Active Blind Spot Assist are only aids. They may fail to detect some vehicles and are no substitute for attentive driving.

Always ensure that there is sufficient distance to the side for other road users and obstacles.

System limitations

The system may be limited in the following situations:

- The sensors are dirty or covered.
- Poor visibility, e.g. due to fog, heavy rain, snow or spray.
- Narrow vehicles, e.g. bicycles, are within the monitoring range.

Warnings may be issued in error when driving close to crash barriers or similar solid lane borders. Warnings may be interrupted when driving alongside long vehicles, for example trucks, for a prolonged time.

Blind Spot Assist is not operational when reverse gear is engaged.

Function of brake application (Active Blind Spot Assist)

ⓘ The brake application function is only available for vehicles with a Driving Assistance Package.

If Active Blind Spot Assist detects a risk of a side impact in the monitoring range, a course-correcting brake application is carried out. This is designed to help you avoid a collision.

The course-correcting brake application is available in the speed range between approximately 20 mph (30 km/h) and 125 mph (200 km/h).

⚠ **WARNING** Risk of accident despite brake application of Active Blind Spot Assist

A course-correcting brake application cannot always prevent a collision.

▶ Always steer, brake or accelerate yourself, especially if Active Blind Spot Assist warns you or makes a course-correcting brake application.

▶ Always maintain a safe distance at the sides.

WARNING Risk of accident despite Active Blind Spot Assist

Active Blind Spot Assist does not react to the following:

- If vehicles overtake too closely on the side, placing them in the blind spot area
- Vehicles approaching and overtaking you at a greatly different speed

As a result, Active Blind Spot Assist may neither give warnings nor intervene in such situations.

▶ Always pay careful attention to the traffic situation and maintain a safe distance at the side of the vehicle.

If a course-correcting brake application occurs, the red warning lamp flashes in the outside mirror and a warning tone sounds. In addition, a display (1) indicating the danger of a side collision appears in the multifunction display.

In rare cases, the system may make an inappropriate brake application. This brake application may be interrupted at any time if you steer slightly in the opposite direction or accelerate.

System limits

Either a course-correcting brake application appropriate to the driving situation, or none at all, may occur in the following situations:

- Vehicles or obstacles, e.g. crash barriers, are located on both sides of your vehicle.
- A vehicle approaches too closely on the side.
- You have adopted a sporty driving style with high cornering speeds.
- You brake or accelerate significantly.
- A driving safety system intervenes, e.g. ESP® or Active Brake Assist.
- ESP® is deactivated.
- A loss of tire pressure or a faulty tire is detected.

Activating/deactivating Blind Spot Assist or Active Blind Spot Assist

Multimedia system:

Vehicle ▸▸ Assistance ▸▸ Blind Spot Assist

▶ Activate ☑ or deactivate ☐ the function.

Active Lane Keeping Assist

Function of Active Lane Keeping Assist

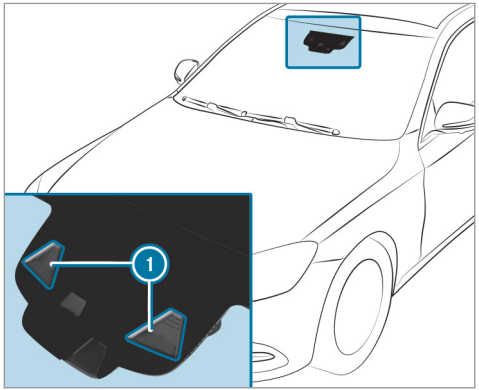

Active Lane Keeping Assist monitors the area in front of your vehicle by means of multifunction camera 1. It serves to protect you against unintentionally leaving your lane. You will be warned by vibration pulses in the steering wheel and guided by a course-correcting brake application back into your lane.

You are warned by vibration pulses in the steering wheel in the following circumstances:

- Active Lane Keeping Assist detects a lane marking.
- A front wheel drives over this lane marking.

You will also be guided back into your lane by means of a course-correcting brake application if the following conditions are met:

- Active Lane Keeping Assist detects lane markings on both edges of the lane.
- A front wheel drives over a solid lane marking.

You can activate or deactivate the Active Lane Keeping Assist warning.

Active Lane Keeping Assist can neither reduce the risk of an accident if you fail to adapt your driving style nor override the laws of physics. It cannot take into account road, weather or traffic conditions. Active Lane Keeping Assist is only an aid. You are responsible for maintaining a safe distance to the vehicle in front, for vehicle speed, for braking in good time and for staying in lane.

Vehicles with Driving Assistance Package or Driving Assistance Plus Package: Active Lane Keeping Assist can bring the vehicle back into the lane with a lane-correcting brake application. In the case of a broken lane marking being detected, a brake application will only be made if a vehicle has been detected in the adjacent lane. Oncoming vehicles, overtaking vehicles and vehicles in adjacent lanes can be detected.

Active Lane Keeping Assist is available in the speed range between 37 mph (60 km/h) and 124 mph (200 km/h).

If a lane-correcting brake application occurs, display ① appears in the multifunction display.

Sensitivity of Active Lane Keeping Assist

ⓘ The availability of the following function is country-dependent.

A lane-correcting brake application also occurs in the Sensitive setting in the following situations:

- Active Lane Keeping Assist detects a solid lane marking.
- A front wheel drives over this lane marking.

System limits

No lane-correcting brake application occurs in the following situations:

- You clearly and actively steer, brake or accelerate.
- You have switched on the turn signal indicator (situation-dependent).
- A driving safety system intervenes, such as ESP®, Active Brake Assist or Active Blind Spot Assist.
- You have adopted a sporty driving style with high cornering speeds or high rates of acceleration.
- When ESP® is deactivated.
- If a loss of tire pressure or a faulty tire has been detected and displayed.

The system may be impaired or may not function in the following situations:

- If there is poor visibility, e.g. due to insufficient illumination of the road, if there are highly variable shade conditions or in rain, snow, fog or heavy spray.
- If there is glare, e.g. from oncoming traffic, the sun or reflections.
- If the windshield in the area of the multifunction camera is dirty, or if the camera is fogged up, damaged or covered.
- If there are no lane markings, or several unclear lane markings are present for one lane, e.g. around roadworks.
- If the lane markings are worn, dark or covered.
- If the distance to the vehicle in front is too short and thus the lane markings cannot be detected.
- If the lane markings change quickly, e.g. lanes branch off, cross one another or merge.
- If the roadway is very narrow and winding.

Vehicles without Driving Assistance Package or Driving Assistance Plus Package:
Active Lane Keeping Assist uses radar sensors to monitor several areas around the vehicle. If the radar sensors in the rear bumper are dirty or covered with snow, the system may be impaired or may not function. If an obstacle in the lane in which you are driving has been detected, no lane-correcting brake application occurs.

Activating/deactivating Active Lane Keeping Assist

⚠ **WARNING** Risk of accident despite Active Lane Keeping Assist warning

A lane-correcting brake application cannot always bring the vehicle back into the original lane.

▶ Always steer, brake or accelerate yourself, especially if Active Lane Keeping Assist warns you or makes a lane-correcting brake application.

⚠ **WARNING** Risk of accident despite intervention of Active Lane Keeping Assist

Active Lane Keeping Assist does not detect traffic conditions or road users. In very rare cases, the system may make an inappropriate brake application, e.g. after intentionally driving over a solid lane marking.

The brake application can be interrupted at any time if you steer slightly in the opposite direction.

▶ Always make sure that there is sufficient distance to the side for other traffic or obstacles.

⚠ **WARNING** Risk of accident despite Lane Keeping Assist

Lane Keeping Assist cannot always clearly detect lane markings.

In such cases, Lane Keeping Assist can:

- give an unnecessary warning
- not give a warning

▶ Always pay particular attention to the traffic situation and keep within the lane, especially if Active Lane Keeping Assist alerts you.

Be sure to observe the system limitations of Active Lane Keeping Assist.

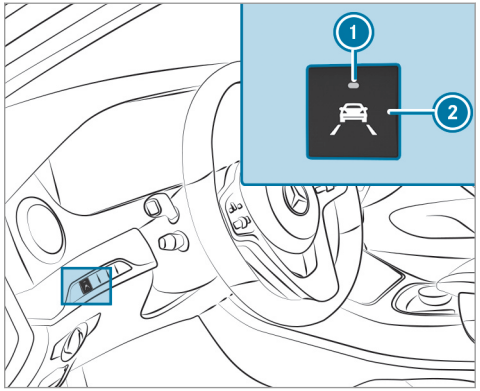

▶ Press button 2.
If indicator lamp 1 lights up, Active Lane Keeping Assist is activated, the lane markings are shown as light in the assistance graphic. When Active Lane Keeping Assist is active, the lane markings are shown in green in the assistance graphic.

ⓘ Depending on the country, you may have to press and hold the button to deactivate.

Setting the sensitivity of Active Lane Keeping Assist

Multimedia system:

Vehicle ▸▸ Assistance ▸▸ Act. Lane Keep. Assist

▶ Select a setting.

Activating/deactivating the warning

▶ Activate ☑ or deactivate ☐ Lane Depart. Warning.
You do not receive any warning when leaving a lane if the lane keeping warning system is deactivated.

Vehicle towing instructions

The vehicle is not suitable for the use of tow bar systems that are used for flat towing or dinghy towing, for example. Attaching and using tow bar systems can lead to damage on the vehicle. When you are towing a vehicle with tow bar systems, safe driving characteristics cannot be guaranteed for the towing vehicle or the towed vehicle. The vehicle-trailer combination may swerve from side to side. Comply with the permitted towing methods (→ page 436) and the instructions for towing with both axles on the ground (→ page 438).

Instrument Display overview

WARNING Risk of accident due to an instrument display malfunction

If the Instrument Display has failed or malfunctioned, you may not recognize function restrictions applying to safety relevant systems.

The operating safety of your vehicle may be impaired.

- ▶ Drive on carefully.
- ▶ Have the vehicle checked immediately at a qualified specialist workshop.

Mercedes-AMG vehicles: observe the notes in the Supplement. Otherwise, you may fail to recognize dangers.

Plug-in hybrid: observe the notes in the Supplement. Otherwise, you may fail to recognize dangers.

If the operating safety of your vehicle is impaired, park the vehicle safely as soon as possible. Contact a qualified specialist workshop.

Instrument Display

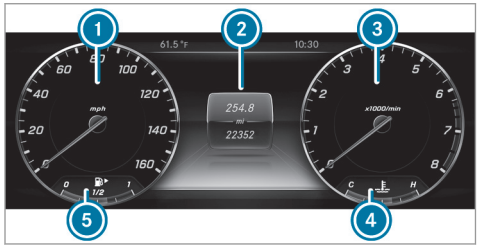

1. Speedometer
2. Multifunction display
3. Tachometer
4. Coolant temperature gauge
5. Fuel level and fuel filler flap location indicator

ⓘ This display is an example. Other displays are possible instead of tachometer 3.

The segments in speedometer 1 indicate the system status for the following:

- Cruise control (→ page 210)
- Active Distance Assist DISTRONIC (→ page 212)

Vehicles with Traffic Sign Assist: Detected instructions and traffic signs will appear on the speedometer (→ page 251).

NOTE Engine damage due to excessively high engine speeds

The engine will be damaged if you drive with the engine in the overrevving range.

- ▶ Do not drive with the engine in the overrevving range.

The overrevving range is shown in red on tachometer 3. When the overrevving range is reached, the fuel supply will be interrupted to protect the engine.

During normal operating conditions, coolant temperature display 4 may rise to 248 °F (120 °C).

WARNING Danger of burns when opening the hood

If you open the hood when the engine has overheated or during a fire in the engine compartment, you could come into contact with hot gases or other escaping operating fluids.

- Before opening the hood, allow the engine to cool down.
- In the event of a fire in the engine compartment, keep the hood closed and call the fire service.

Overview of the buttons on the steering wheel

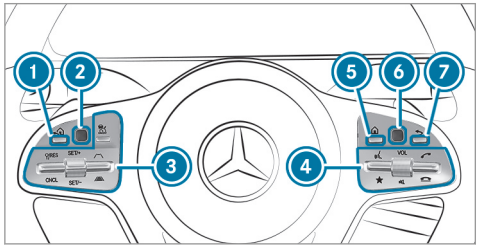

1. Back/Home button (press and hold), on-board computer
2. Touch Control, on-board computer
3. Control panel for cruise control or Active Distance Assist DISTRONIC
4. Control panel for multimedia system:
   - Voice Control System
   - Displays favorites
   - VOL: control knob, adjusts the volume or switches the sound off (press)
   - Makes/accepts a call
   - Rejects/ends a call
5. Calls up the home screen
6. Touch Control multimedia system
7. Back button

Operating the on-board computer

Mercedes-AMG vehicles: observe the notes in the Supplement. Otherwise, you may fail to recognize dangers.

WARNING Risk of distraction from information systems and communications equipment

If you operate information and communication equipment integrated in the vehicle when driving, you will be distracted from the traffic situation. This could also cause you to lose control of the vehicle.

- Only operate this equipment when the traffic situation permits.
- If you cannot be sure of this, stop the vehicle whilst paying attention to road

and traffic conditions and operate the equipment with the vehicle stationary.

Observe the legal requirements for the country in which you are currently driving when operating the on-board computer.

ⓘ The on-board computer displays will appear on the multifunction display (→ page 267).

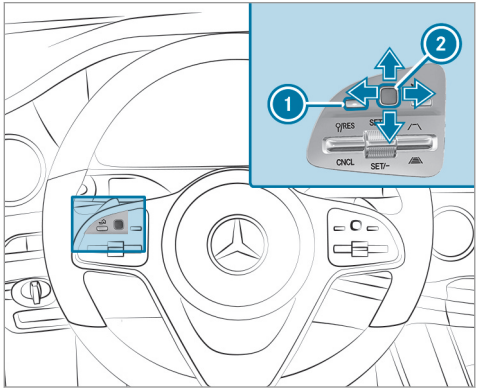

The on-board computer is operated using left-hand Touch Control ② and the left-hand back/home button ①.

The following menus are available:

- Service
- DriveAssist
- Trip
- Navigation
- Radio
- Media
- Phone
- Head-up Disp.
- Designs

The menus can be called up from the menu bar on the multifunction display.

▶ **To call up the menu bar:** press back button on the left ① until the menu bar is displayed.

ⓘ **Vehicles without Active Distance Assist DISTRONIC:** press the [⌂] button to call up the menu bar of the on-board computer.

▶ **To scroll in the menu bar:** swipe left or right on left-hand Touch Control ②.

▶ **To call up a menu or confirm a selection:** press left-hand Touch Control ②.

▶ **To scroll through displays or lists on the menu:** swipe upwards or downwards on left-hand Touch Control ②.

▶ **To call up a submenu or confirm a selection:** press left-hand Touch Control ②.

▶ **To exit a submenu:** press back button on the left ①.

Full-screen menu
You can display the following menus in full on the Instrument Display:

- DriveAssist
- Trip

▶ On the corresponding menu, use left-hand Touch Control ② to scroll to the end of the list.

▶ Press left-hand Touch Control ②.
The selected menu will be displayed in full.

Setting the design

On-board computer:

→ Designs

ⓘ This function is available only for vehicles with a Widescreen Cockpit.

The following designs can be selected:

- Classic
- Sport
- Progressive

▶ **To select a design:** swipe upwards or downwards on the left-hand Touch Control.

▶ Press the left-hand Touch Control.
The Instrument Display will be shown in the selected design.

Setting the area for additional values

G-meter (example)
① Area for additional values
② Index points

▶ **To select display content:** swipe to the right on the left-hand Touch Control.

▶ Swipe upwards or downwards on the left-hand Touch Control to select display content.
When display content is selected, the area for additional values ① will briefly be highlighted.

Index points ② will display the selected list item.

The following display content can be selected in the Classic and Sport designs:

- Tachometer
- Navigation
- ECO display
- Consumption
- G-meter

The following content can be selected in the Progressive design:

- date
- Navigation
- ECO display
- Consumption
- G-meter

Overview of displays on the multifunction display

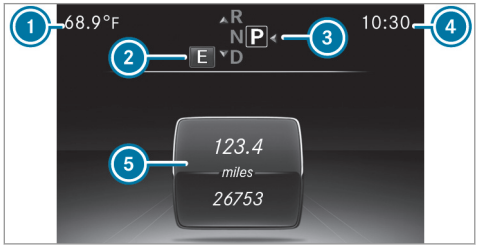

1. Outside temperature
2. Drive program
3. Transmission position
4. Time
5. Display section

ⓘ **Vehicles with an Instrument Display in the Widescreen Cockpit:** the position of the displays will differ from those displayed here.

Further displays on the multifunction display:

- Gearshift recommendation (→ page 187)
- Active Parking Assist activated (→ page 245)
- Parking Assist PARKTRONIC deactivated (→ page 237)
- Cruise control (→ page 210)
- Active Distance Assist DISTRONIC (→ page 212)
- Active Brake Assist(→ page 209)
- Active Steering Assist(→ page 219)
- Active Lane Keeping Assist(→ page 259)
- Active Lane Change Assist(→ page 221)
- HOLD function (→ page 225)
- Adaptive Highbeam Assist (→ page 153)

Vehicles with Traffic Sign Assist: Detected instructions and traffic signs (→ page 251).

Adjusting the instrument lighting

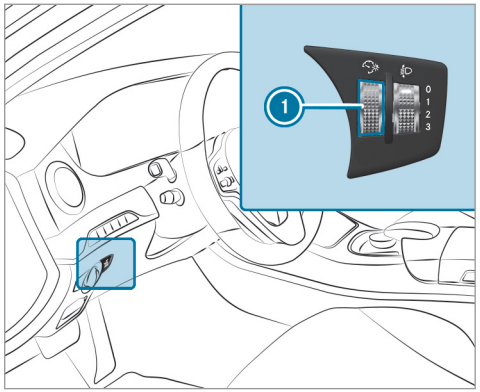

▶ Turn brightness control 1 up or down.
The lighting of the Instrument Display and in the control elements of the vehicle interior is adjusted.

Menus and submenus

Calling up functions on the Service menu of the on-board computer

On-board computer:

→ Service

▶ **To select the function:** swipe upwards or downwards on the left-hand Touch Control.

▶ Press the left-hand Touch Control.

Functions on the Service menu:

- Message memory (→ page 492)
- Tires:
  - Check the tire pressure with the tire pressure monitor (→ page 452)
  - Restart the tire pressure monitor (→ page 453)
- ASSYST PLUS: call up the service due date (→ page 407)
- Engine oil level

Calling up the assistant display

On-board computer:

→ DriveAssist

ⓘ When you have set the style to Classic, you can view the assistant display menu contents in the left-hand area of the Instrument Display .

The following displays are available on the assistant display menu:

- Assistant display
- Attention level (→ page 250)

▶ **To switch between the displays:** swipe upwards or downwards on the left-hand Touch Control.

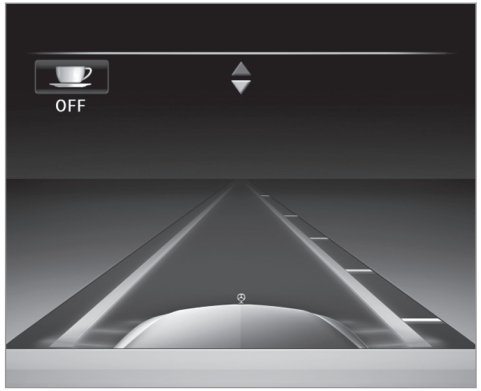

Status displays on the assistant display:

- OFF: ATTENTION ASSIST deactivated
- Light lane markings: Active Lane Keeping Assist enabled
- Green lane markings: Active Lane Keeping Assist active
- Gray radar waves next to vehicle: Blind Spot Assist enabled

- Green radar waves next to vehicle: Blind Spot Assist active
- Active Distance Assist DISTRONIC displays (→ page 212).

Calling up displays on the Trip menu

On-board computer:

→ Trip

ⓘ When you have the style set to Classic, you can view information on the journey in the left-hand area of the Instrument Display.

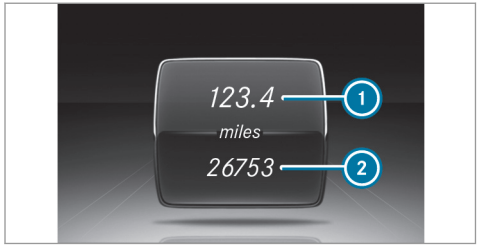

Standard display (example)
1 Trip distance
2 Total distance

Trip computer (example)
1 Total distance
2 Driving time
3 Average speed
4 Average fuel consumption

▶ **To select a display:** swipe upwards or downwards on the left-hand Touch Control.

Displays on the Trip menu:

- Standard display
- Range and current fuel consumption

  A recuperation display is also shown for certain engines. If there is only a small amount of fuel left in the fuel tank, the display will

show a vehicle being refueled instead of the range.

- ECO display (→ page 182)
- Trip computer From Start and From Reset
- Digital speedometer

ⓘ The digital speedometer only appears in the Sport and Supersport styles.

Resetting values on the Trip menu of the on-board computer

On-board computer:

→ Trip

ⓘ The spelling on the main menu displayed may differ. Therefore, observe the menu overview for the Instrument Display (→ page 264).

You can reset the values of the following functions:

- Trip distance
- Trip computer "From start" and "From reset"
- ECO display

▶ **To select the function to be reset:** swipe upwards or downwards on the left-hand Touch Control.

▶ Press the left-hand Touch Control.

▶ Select Yes.

▶ Press the left-hand Touch Control.

If you press and hold the left-hand Touch Control, the function will be reset immediately.

Calling up navigation instructions on the on-board computer

On-board computer:

→ Navigation

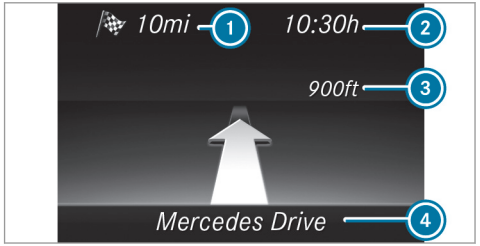

Example: no change of direction announced

1. Distance to the next destination
2. Estimated arrival time
3. Distance to the next change of direction
4. Current road

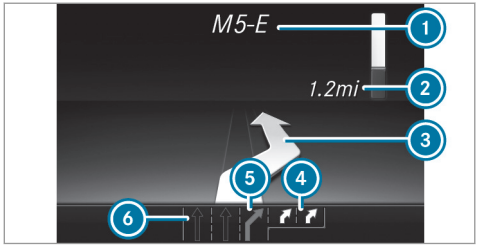

Example: change of direction announced

1. Road to which the change of direction leads
2. Distance to the change of direction
3. Change-of-direction symbol
4. Recommended lane and new lane during a change of direction (white)
5. Possible lane
6. Lane not recommended (dark gray)

Further possible displays in the Navigation menu:

- Calculate New Route or Calculating Route...: a new route is being calculated.
- Road Not Mapped: the road is unknown, e.g. newly built roads.
- No Route: no route could be calculated to the selected destination.
- ▩ : you have reached the destination or an intermediate destination.

▶ **To exit the menu:** press the back button on the left.

In the Navigation menu, you can also start navigation to one of the previous destinations:

▶ Press the left-hand Touch Control.

▶ **To select the destination:** swipe upwards or downwards on the left-hand Touch Control.

▶ Press the left-hand Touch Control.
Route guidance is started.

If route guidance has already been activated, a request will appear asking whether you wish to end the current route guidance.

▶ Select Yes.

▶ Press the left-hand Touch Control.
Route guidance is started.

Selecting radio stations using the on-board computer

On-board computer:

→ Radio

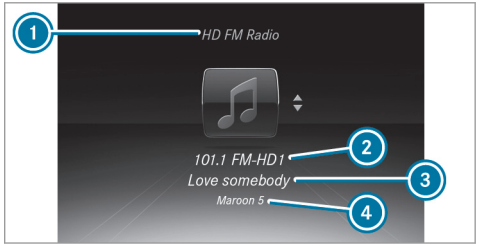

1. Frequency range
2. Station
3. Name of track
4. Name of artist

When you select a station in the memory presets, the preset appears next to the station name. When you select a saved station in the frequency range, an asterisk appears next to the station name.

▶ **To select a radio station:** swipe upwards or downwards on the left-hand Touch Control.

Selecting frequency range or station preset list

▶ Press the left-hand Touch Control.

▶ **To select the frequency range/station preset list:** swipe upwards or downwards on the left-hand Touch Control.

▶ Press the left-hand Touch Control.

Media playback using the on-board computer

On-board computer:

→ Media

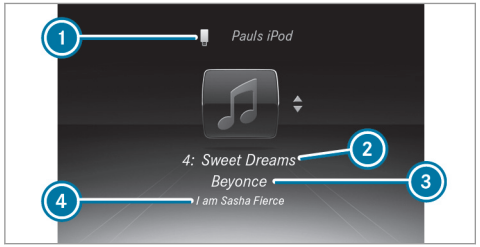

1. Media source
2. Current track and track number
3. Name of artist
4. Name of album

▶ **To change tracks in the active media source:** swipe upwards or downwards on the left-hand Touch Control.

Changing the media source

▶ Press the left-hand Touch Control.

▶ **To select a media source:** swipe upwards or downwards on the left-hand Touch Control.

▶ Press the left-hand Touch Control.

Dialing telephone numbers using the on-board computer

Requirements:

- The mobile phone is connected to the multimedia system.

On-board computer:

→ Phone

⚠ **WARNING** Risk of distraction from information systems and communications equipment

If you operate information and communication equipment integrated in the vehicle when driving, you will be distracted from the

traffic situation. This could also cause you to lose control of the vehicle.

- ▶ Only operate this equipment when the traffic situation permits.
- ▶ If you cannot be sure of this, stop the vehicle whilst paying attention to road and traffic conditions and operate the equipment with the vehicle stationary.

When telephoning, you must observe the legal requirements for the country in which you are currently driving.
The most recent telephone connections (dialed, received and missed calls) are displayed in the Phone menu.

- ▶ **To select the telephone number:** swipe upwards or downwards on the left-hand Touch Control.
- ▶ Press the left-hand Touch Control.
  If there is only one telephone number saved to an entry: the telephone number is selected.
- ▶ **If there are multiple telephone numbers saved to an entry:** swipe upwards or downwards on the left-hand Touch Control to select the desired telephone number.
- ▶ Press the left-hand Touch Control.
  The telephone number is dialed.

The following displays may appear instead of the telephone numbers dialed:

- Please Wait...: the application is starting. When a Bluetooth® connection to the mobile phone is not established, the menu for authorizing and connecting a mobile phone is displayed on the multimedia system (→ page 341).
- Importing Contacts...: the contacts from the mobile phone or from a storage medium are being imported.

Accepting/rejecting a call

When you receive a call, the Incoming Call - message appears on the Head-up Display.

- ▶ Swipe upwards or downwards on the left-hand Touch Control and select (Accept) or (Reject).
- ▶ Press the left-hand Touch Control.

The call may be accepted/rejected using the or buttons on the steering wheel.

Adjusting the Head-up Display settings on the on-board computer

On-board computer:
→ Head-up Disp.

The following characteristics of the Head-up Display can be adjusted:

- Position
- Brightness
- Display Content

- ▶ **To select characteristics:** swipe upwards or downwards on the left-hand Touch Control.
- ▶ Press the left-hand Touch Control.
- ▶ **To adjust the value:** swipe upwards or downwards on the left-hand Touch Control.
- ▶ Press the left-hand Touch Control.

1. Setting currently selected
2. Digital speedometer
3. Traffic Sign Assist
4. Navigation displays

Head-up Display

Function of the Head-up Display

Mercedes-AMG vehicles: Observe the notes in the Supplement. Otherwise, you may not recognize dangers.

The Head-up Display projects information from the navigation system, the driver assistance systems and some warning messages above the cockpit into the driver's field of vision.

Display elements

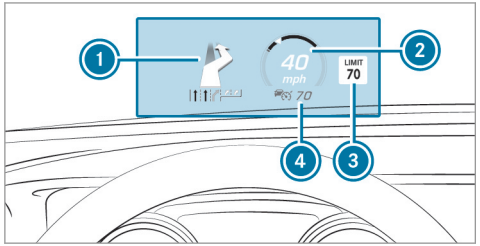

1. Navigation instructions
2. Current speed
3. Detected instructions and traffic signs
4. Set speed in the driver assistance system (e.g. cruise control)

When you receive a call, the Incoming Call message appears on the Head-up Display.

System limitations

The visibility is influenced by the following conditions:

- Seat position
- The positioning of the display image
- Light conditions
- Wet roads
- Objects on the display cover
- Polarization in sunglasses

ⓘ In extreme sunlight, sections of the display may appear washed out. You can correct this by switching the Head-up Display off and on again.

Switching the Head-up Display on/off

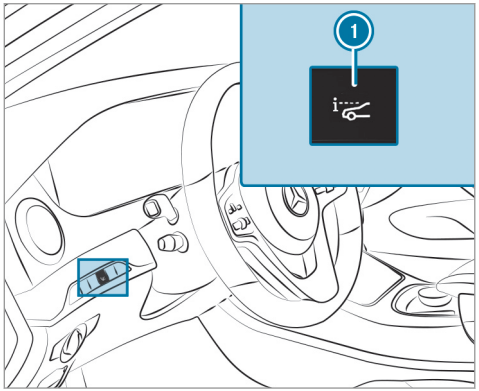

▶ Press button 1.

Notes on operating safety

⚠ **WARNING** Risk of distraction from information systems and communications equipment

If you operate information and communication equipment integrated in the vehicle when driving, you will be distracted from the traffic situation. This could also cause you to lose control of the vehicle.

- ▶ Only operate this equipment when the traffic situation permits.
- ▶ If you cannot be sure of this, stop the vehicle whilst paying attention to road and traffic conditions and operate the equipment with the vehicle stationary.

⚠ **WARNING** Risk of an accident from operating mobile communication equipment while the vehicle is in motion

Mobile communications devices distract the driver from the traffic situation. This could also cause the driver to lose control of the vehicle.

- ▶ As the driver, only operate mobile communications devices when the vehicle is stationary.
- ▶ As a vehicle occupant, only use mobile communications devices in the areas intended for this purpose, e.g. in the rear passenger compartment.

⚠ **WARNING** Risk of injury due to objects being stowed incorrectly

If objects in the vehicle interior are stowed incorrectly, they can slide or be thrown around and hit vehicle occupants. In addition, cup holders, open stowage spaces and mobile phone receptacles cannot always retain all objects they contain.

There is a risk of injury, particularly in the event of sudden braking or a sudden change in direction.

- ▶ Always stow objects so that they cannot be thrown around in such situations.
- ▶ Always make sure that objects do not protrude from stowage spaces, luggage nets or stowage nets.
- ▶ Close the lockable stowage spaces before starting a journey.
- ▶ Always stow and secure heavy, hard, pointed, sharp-edged, fragile or bulky objects in the trunk/load compartment.

For your own safety, always observe the following points when operating mobile communications equipment and especially your voice control system:

- Observe the legal requirements for the country in which you are driving.
- While driving, only operate mobile communications equipment and your voice control system when the traffic conditions permit it. You may otherwise be distracted from the traffic conditions and cause an accident, injuring yourself and others.

- If you use the voice control system in an emergency your voice can change and your telephone call, e.g. an emergency call, can thereby be unnecessarily delayed.
- Familiarize yourself with the voice control system functions before starting the journey.
- Comply with the loading guidelines (→ page 125).

Operation

Overview of operation of the Voice Control System on the multifunction steering wheel

The Voice Control System is operational approximately thirty seconds after the ignition is switched on.

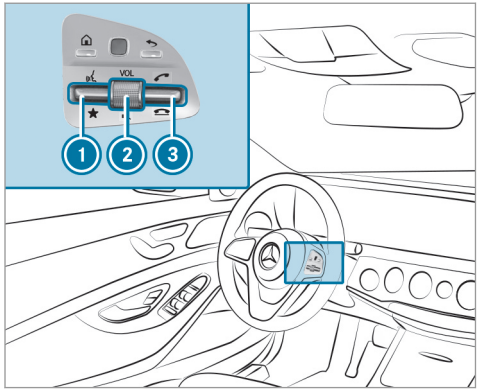

1. Press the rocker switch up: starts the Voice Control System
2. Press the control knob: switches the sound off or on (ends the Voice Control System)
   Turn the control knob up/down: increases/decreases the volume
3. Press the rocker switch up: makes/accepts a call
   Press the rocker switch down: rejects/ends a call (ends the Voice Control System)

Conducting a dialog with the Voice Control System

- **To start or continue a dialog:** on the multifunction steering wheel, press the rocker switch up.
  You can say a voice command after an acoustic signal.
- **To correct an entry:** say the Correction voice command.
- **To select an entry from the selection list:** say the line number or the contents.
- **To browse the selection list:** say the Next or Back voice command.
- **To interrupt the dialog:** say the Pause voice command.
- **To cancel the dialog:** say the Cancel voice command.

Operable functions

You can use the Voice Control System to operate the following equipment depending on the features:

- Telephone
- Text messages
- Navigation
- Address book
- Radio
- Audio (memory card, Media Interface, USB and Bluetooth® audio)
- Vehicle

Overview of types of voice command

A distinction is made between the following voice commands:

- **Global voice commands** can be said at any time and regardless of the current application, e.g. the voice commands Navigate to, Call or Text message to.
- **Application-specific voice commands** are only available for the active application.

Once the Voice Control System is started an autocue is shown. Apart from the available voice commands for the application currently active, this also cites example voice commands for other applications which are not active. In this way, you will be familiar more quickly with the available voice commands. The list can be scrolled or it can be operated by speech or the controller/touchpad.

Notes on the language setting

You can change the language of the Voice Control System via the system language settings. If the set system language is not supported by the Voice Control System, English will be selected.

The Voice Control System is available in English, French, Portuguese and Spanish.

Using the Voice Control System effectively

Features of audible help functions

You receive information and help for the following topics:

- **Optimum operation:** say the brief instruction voice command.
- **Current application:** on the multifunction steering wheel, press the [ ] rocker switch up and say the Help voice command.
- **Continued dialog:** say the Help voice command during a voice dialog.
- **Specific function:** say voice commands for the desired function, e.g. Help telephone.

Notes on how to improve speech quality

If the Voice Control System does not understand you:

- only operate the Voice Control System from the driver's seat.
- say the voice commands coherently and clearly, but do not exaggerate the words.

- avoid loud noises that cause interference while making a voice command entry, e.g. the blower.

A voice tag in the address book is not recognized:

- only create sensible address book entries in the system/mobile phone, e.g. enter surname and first name in the correct field.
- do not use any abbreviations, unnecessary spaces or special characters.

If a station list entry is not recognized:

- say the Read out station list voice command.

Essential voice commands

Overview of switch voice commands

Switch voice commands can be used to open certain applications. The voice command selection can be used regardless of the application that is currently active.

Switch voice commands

Voice command	Function
Navigation	To switch to navigation mode
Map	To switch to map display
Address book	To switch to address book
Telephone	To switch to telephone mode
Text message	To switch to text messages
Radio	To switch to radio mode
Media	To switch to media mode

Voice command	Function
USB	To switch to USB
Memory card	To switch to memory card
Internet application <Name>	To start a Mercedes-Benz online application. The application must be called up by touch once prior to use.
Mercedes-Benz Apps	To switch to Mercedes-Benz Apps
Connect	To switch to Internet mode
Vehicle menu	To switch to vehicle settings
System settings menu	To switch to system settings

Overview of navigation voice commands

Using navigation voice commands, you can enter POIs or conventional addresses as well as directly change important navigation settings.

Navigation voice commands

Voice command	Function
Navigate to <Address/POI/Contact>	Universal search for all types of destinations. A search is conducted in the address book contacts, the navigation database and on the Internet (POIs). The order of the details, e.g. city, street or house number, can be changed.
Address in <Country>	Destination entry in a desired country, e.g. address in France
Home	Starts navigation to home address
Work	Starts navigation to your workspace
POI <POI>	Destination entry for a POI, e.g. the POI Brandenburg Gate. A search is performed in the navigation database and on the Internet.
POI online search <POI>	Conducts a POI search on the Internet only
Navigate to contact <Name>	Destination entry to a contact in the address book

Voice command	Function
Enter country Enter city Enter district Enter street Enter intersection Enter house number Enter ZIP code	Enters a country/city/district/street/intersection/house number/ZIP code
Nearest restaurant Nearest parking lot Nearest rest area with restrooms Nearest gas station	Searches for nearby restaurants, parking lots, rest areas with restrooms and gas stations
Restaurant along the route Parking along the route Rest area with restrooms along the route Gas stations along the route	Searches for restaurants, parking options, rest areas with restrooms and gas stations along the route

Voice command	Function
Restaurant at destination Parking at destination Rest area with restrooms at destination Gas station at destination	Searches for restaurants, parking options, rest areas with restrooms and gas stations at the destination
Last destinations	Selects a destination from the list of last entered destinations
Alternative routes	Switches route guidance to another route
Start route guidance	Starts route guidance after entering a valid destination
Cancel route guidance	Cancels route guidance
Guidance instructions on Guidance instructions off	Switches the route guidance voice output on/off
Show traffic map Hide traffic map	Switches the traffic map on/off
Switch on POI symbols Switch off POI symbols	Switches the POI symbols display on the map on/off

Overview of telephone voice commands

You can use the telephone voice commands to make phone calls or search through the address book.

Telephone voice commands

Voice command	Function
Call <Name>	Makes a phone call. All address book names are available.
Search for contact <Name>	Searches for and displays a contact. All address book names are available.
Outgoing calls	Displays the last call
Redial	Selects the last phone number dialed

Overview of radio voice commands

Radio voice commands can also be used when the radio application is running in the background.

Radio voice commands

Voice command	Function
Station <Name>	To call up receivable or saved stations
<Frequency>	To enter a frequency directly
Next station	To switch to the next available station
Previous station	To switch to the previous station
Save station	To save a station in the station list
Show station list	To display the names of all receivable stations
Read out station list	To listen to the names of all receivable stations
Traffic information on Traffic information off	To switch the traffic information service on/off
Radio info on Radio info off	To switch information about the current station on/off

Overview of media player voice commands

Media player voice commands can also be used when the media player is running in the background.

Media player voice commands

Voice command	Function
Play <Tracks> Play <Albums> Play <Artists> Play<Composers> Play <Genres> Play <Playlists>	The names of all available tracks, albums, artists, composers, genres or playlists are accepted during the search.
Media search <Track> Media search <Albums> Media search <Artists> Media search <Composers> Media search <Genres> Media search <Playlists>	The names of all available tracks, albums, artists, composers, genres or playlists are accepted during the search.

Voice command	Function
Show all albums Show all artists Show all composers Show all genres Show all tracks Show all playlists	Available albums, artists, composers, genres, tracks or playlists are searched for.
Next track	To select the next track
Previous track	To select the previous track
Random track list on Random track list off	To switch the random track list on/off

Overview of message voice commands

Text messages can be created, edited and listened to using the message voice commands.

Message voice commands

Voice command	Function
Text message to <Name>	To create a message. All address book names are available.
Reply	To reply to a message
Forward text message	To forward a message

Overview of vehicle voice commands

You can use the vehicle voice commands to directly call up the corresponding menus for the vehicle settings.

Vehicle voice commands

Voice command	Function
Ambient light menu	To display ambient light settings
Ambient light "blue"	To switch ambient light to blue
Display and styles menu	To show display settings
Assistance menu	To display assistance settings

Voice command	Function
Scent menu	To display fragrance settings
Energy flow	To display energy flow settings
Ionization menu	To display ionization settings
Climate control menu	To display climate control settings
Automatic climate control driver on	To switch on the automatic climate control settings on the driver's side
Light menu	To display light settings
Massage menu	To display massage settings
Massage driver's seat on	To switch on the massage function for the driver's seat
Massage driver's seat off	To switch off the massage function for the driver's seat
Outside temperature	To display the outside temperature
Engine data	To display engine data
Seats menu	To display seat adjustment settings
Seat heating front passenger level "2"	To set the seat heating for the front passenger seat to level 2

Voice command	Function
Consumption menu	To display consumption
Vehicle data	To display vehicle data

Overview and operation

Overview of the multimedia system

WARNING Risk of distraction from information systems and communications equipment

If you operate information and communication equipment integrated in the vehicle when driving, you will be distracted from the traffic situation. This could also cause you to lose control of the vehicle.

- ▶ Only operate this equipment when the traffic situation permits.
- ▶ If you cannot be sure of this, stop the vehicle whilst paying attention to road and traffic conditions and operate the equipment with the vehicle stationary.

You must observe the legal requirements for the country in which you are currently driving when operating the multimedia system.

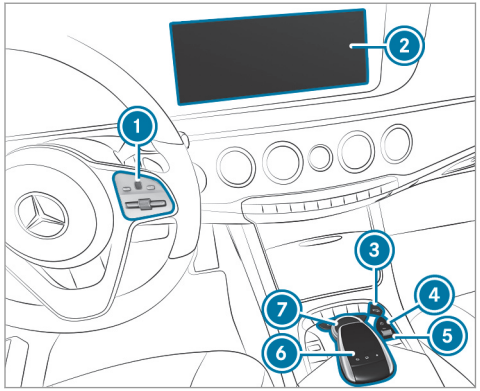

1. Touch Control
   Multimedia system button group on the steering wheel (→ page 264)
2. Media display
3. Main function button group (→ page 295)
4. [⏻] button
   Switches multimedia system on/off
   For Mercedes-AMG vehicles
   [P] button Active Parking Assist
5. Control knob
   Adjusts the volume (→ page 297)
   Switches the mute function on/off (→ page 297)
   For Mercedes-AMG vehicles
   Turn: adjusts the volume
   Press: switches the multimedia system on/off
6. Touchpad
7. Controller

Notes on the media display

NOTE Scratches on the display

The display has a highly sensitive, high-gloss surface. There is a risk of it becoming scratched.

- ▶ Avoid touching the display.
- ▶ Observe the notes on cleaning.

Observe the notes on caring for the interior (→ page 422).

Automatic temperature-controlled switch-off feature: if the temperature is too high, the brightness is initially reduced automatically. The display may then switch off completely for a while.

ⓘ If you are wearing polarized sunglasses, it may be difficult to read the display.

Central control elements overview

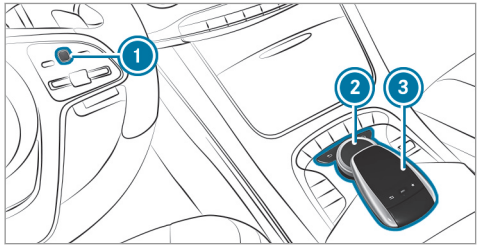

1. Touch Control
2. Controller
3. Touchpad

Touch Control

Operating Touch Control

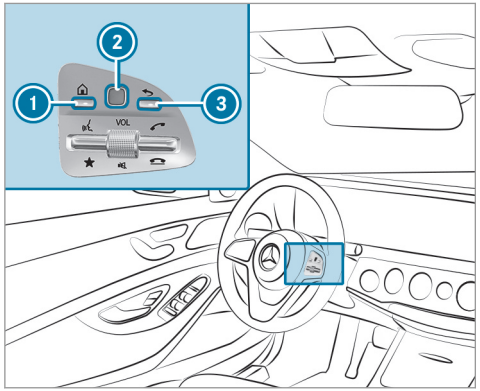

▶ **To call up main functions:** press button 1.

or

▶ Press and hold button 3.
▶ **To call up favorites:** press button 1.
▶ Swipe down on Touch Control 2.
▶ **To open a list:** press Touch Control 2.
▶ **To close a list:** press button 3.

or

▶ Swipe right on Touch Control 2.
▶ **To select a menu item:** swipe up, down, left or right on Touch Control 2.
▶ Press Touch Control 2.
▶ **To move the digital map:** swipe in any direction.

Setting the sensitivity for the Touch Control
Multimedia system:

System ▸▸ Input
▸▸ Touch Control Sensitivity

▶ Select Fast, Medium or Slow.

Operating the controller

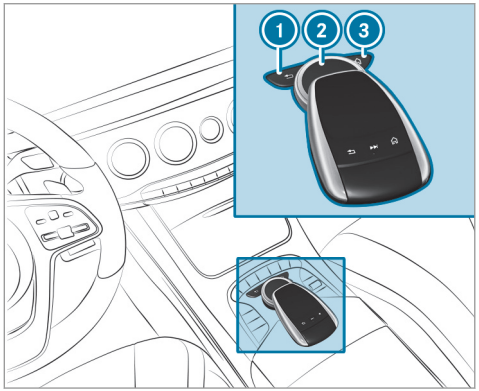

1 [⮌] button
Press briefly: returns to the previous display
Press and hold: calls up main functions
2 Controller
3 [⌂] button
Calls up the main functions
To call up favorites: when the main functions are displayed, slide controller 2 down.

Controller 2 operating options:

- ▶ Turn (◎) counter-clockwise or clockwise.
- ▶ Slide ←◎→ left or right.
- ▶ Slide ↑◎↓ up or down.
- ▶ Slide ⤡◎⤢ diagonally.
- ▶ Press ◎ briefly or press and hold.

Touchpad

Activating/deactivating the touchpad

Multimedia system:

System ▸▸ [☝] Input

- ▶ Activate ☑ or deactivate ☐ the Touchpad.

Operating the touchpad

Requirements:

- The touchpad is switched on (→ page 293).

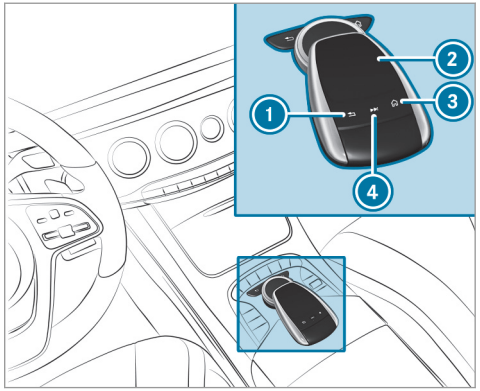

1 [⮌] button
Press briefly: returns to the previous display
Press and hold: calls up main functions
2 Touchpad
3 [⌂] button
Calls up the main functions
Calls up favorites: when the main functions are displayed, swipe down on touchpad 2.

④ [▶▶|] button
Calls up the control menu of the last active audio source

You can navigate in menus and lists via the touch-sensitive surface of touchpad ② by using **a single-finger swipe**.

- **To open or close lists:** swipe left or right.
- **To select the menu item:** swipe up, down, left or right.
- Press touchpad ②.
- **To move the digital map:** swipe in any direction.

Use the following functions with a two-finger swipe:

- **To call up main functions and favorites:** swipe down with two fingers. The swipe must start in the upper area of the touchpad.
- **To zoom in and out of the map:** move two fingers together or apart.
- **To call up the control menu of the last active audio source:** swipe up with two fingers. The swipe must start in the lower area of the touchpad.

Setting the sensitivity for the touchpad
Multimedia system:
System ▸▸ Input

- Select Touchpad Sensitivity.
- Select Fast, Medium or Slow.
- **To set the pressure sensitivity:** switch Touchpad Tap on ☑ or off ☐.
  If the function is switched on ☑, a tap on the touchpad is enough to select a menu item.

Handwriting recognition: switching the read-aloud function on/off
Multimedia system:
System ▸▸ Audio
▸▸ System Feedback

- Switch Read Out Handwriting Recognition on ☑ or off ☐.

Activating/deactivating haptic operating feedback on the touchpad
Multimedia system:
System ▸▸ Input

The function supports you when making entries on the touchpad and when selecting menus.

- Switch Haptic Operating Feedback on ☑ or off ☐.
  When the function is activated, a tactile feedback in the form of a vibration is effected when the touchpad is operated.

Selecting a station and track using the touchpad

- Press the [▶▶|] button on the touchpad.

or

- Swipe up with two fingers. The swipe must start in the lower area of the touchpad.
  The control menu appears for the audio source that was last selected.
- Use one finger to swipe up or down.
  Radio: the previous or the next station is set.
  Media source: the previous or the next music track is selected.

▶ **To hide the control menu:** swipe down with two fingers. The swipe must start in the upper area of the touchpad.

Main functions

Calling up the main functions

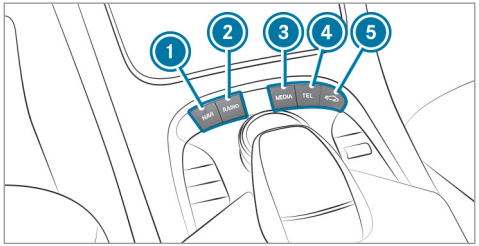

1. NAVI button
   Calls up navigation
2. RADIO button
   Calls up the radio
3. MEDIA button
   Calls up media
4. TEL button
   Calls up the telephone
5. button
   Sets vehicle functions

▶ Alternatively: press the button on the central control element.
The main functions are displayed.

▶ Select a main function.

Favorites

Overview of favorites

Favorites offer you quick access to frequently used applications. It is possible to create 20 favorites in total.

The following functions are available:

- add **pre-defined favorites** from the following categories (→ page 296):
  - Navigation
  - Entertainment
  - Phone
  - Connect
  - Vehicle
  - System Settings
- add **your own favorites** (→ page 296)
- rename favorites (→ page 296).
- move favorites (→ page 296).
- delete favorites (→ page 296).
- reset all favorites (→ page 296)

Calling up favorites

▶ Press the button.
The main functions are displayed.

▶ Navigate downwards once.
Navigating means:
- Swiping on the Touch Control or the touchpad
- Sliding the controller

Leaving the favorites menu

▶ Press the button.

Adding favorites

Adding predefined favorites

- Press the [⌂] button.
  The main functions are displayed.
- Navigate downwards twice.
  The Favorites menu appears.
- Select New Favorite.
  The categories are displayed.
- Select a category.
  The favorites are displayed.
- Select a favorite.
- Store the favorite at the desired position.
  If a favorite has already been added at this position, it will be overwritten.

Example: adding your own favorites

- Select Vehicle.
- Select Full Screen: Consumption.
- Press and hold the [⌂] button until the favorites are displayed.
- Store the favorite at the desired position.

If No function available for saving. is shown, the selected function cannot be added.

Renaming favorites

- Press the [⌂] button.
  The main functions are displayed.
- Navigate downwards once.
- Select a favorite.
- Navigate downwards once.
  The Favorites menu appears.
- Select Rename.
- Enter the characters.
- **To confirm the entry:** select [ok].

Moving favorites

- Press the [⌂] button.
  The main functions are displayed.
- Navigate downwards once.
- Select a favorite.
- Navigate downwards once.
  The Favorites menu appears.
- Select Move.
- Move the favorite to the desired position.
  If a favorite has already been added at this position, it will be overwritten.

Deleting favorites

- Press the [⌂] button.
  The main functions are displayed.
- Navigate downwards once.
- Select a favorite.
- Navigate downwards once.
  The Favorites menu appears.
- **To delete:** select Delete.
- Select Yes.
- **To restore all favorites:** select Reset All.
  A prompt appears.
- Select Yes.
  The favorites are reset to the factory settings.

Switching the sound on/off

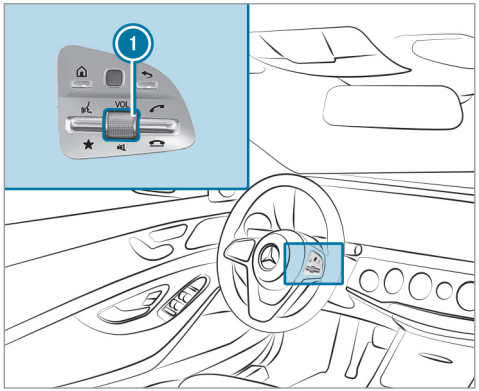

On the multifunction steering wheel

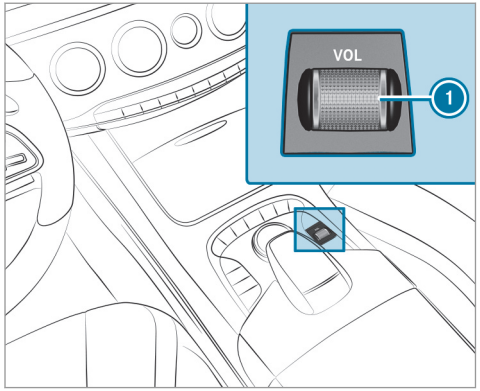

On the multimedia system

▶ **To mute:** press volume control (1).
The [ ] symbol appears in the status line of the media display.

You will also hear traffic announcements and navigation announcements even when the sound is muted.

▶ **To switch on:** change the media source or turn volume control (1).

Adjusting the volume

Setting with the volume control

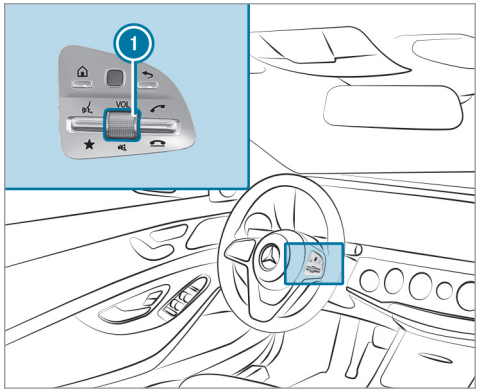

On the multifunction steering wheel

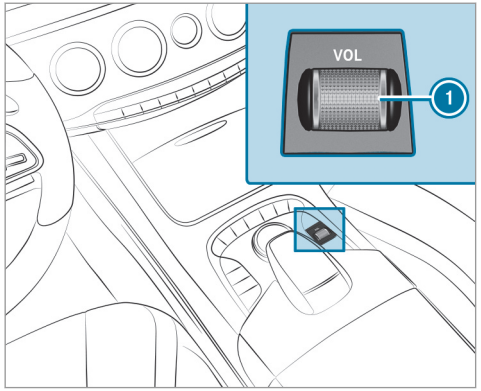

On the multimedia system

▶ Turn volume control 1.
The volume of the current radio or media source is set. The volume of other audio sources can be adjusted separately.

Adjust this in the following situations:

- During a traffic announcement
- During a navigation announcement
  The volume of the navigation announcement changes in accordance with the volume of the current media source.
- During a telephone call
- When entering or exiting a parking space while using Active Parking Assist

Setting in the menu

▶ Select System in the multimedia system.
▶ Select Audio.
▶ Select a volume setting.
▶ Set the volume.

Entering characters

Using the character input function

⚠ **WARNING** Risk of distraction from information systems and communications equipment

If you operate information and communication equipment integrated in the vehicle when driving, you will be distracted from the traffic situation. This could also cause you to lose control of the vehicle.

▶ Only operate this equipment when the traffic situation permits.
▶ If you cannot be sure of this, stop the vehicle whilst paying attention to road and traffic conditions and operate the equipment with the vehicle stationary.

You must observe the legal requirements for the country in which you are currently driving when operating the multimedia system.

Use the character input function in the following situations, for example:

- Renaming a favorite
- Entering a POI or address
- Making a phone call

The following functions are available:

- Selecting a character in the character bar
- Writing a character on the touchpad

Character input can be started with a control element and resumed with another.

▶ **On the Touch Control and controller:** select the characters in the character bar.

Depending on the target entry, the following characters are available:

- The full set of characters is shown
- Only those characters which are useful for the current input string are shown

Other characters are grayed out.

▶ **On the touchpad:** select the characters in the character bar.

or

▶ Write the characters on the touch-sensitive surface of the touchpad.
Handwriting recognition supports you by means of character suggestions and a read-aloud function.

Examples of character entry:

- Renaming a favorite
- Entering a POI or an address using free or step-by-step search
- Entering a web address

Entering characters using the controller

Example: renaming favorites

▶ Call up the "Renaming favorites" function (→ page 296).

▶ **To enter a character:** turn ⟨◎⟩, slide ↑◎↓ and press the controller.
The character is entered in the input line.

Use the following entry functions:

⌫ To delete a character: press the controller.

To delete an entry: press and hold the controller until the entire entry is deleted.

••• To switch to special characters and symbols.

⇧ To switch to upper-case or lower-case letters.

To switch the language.

To switch to character entry on the touchpad.

ⓘ The available editing functions depend on the editing task, the language set and the character level.

▶ **To confirm the entry:** select ok.

Example: entering a destination (navigation)

▶ Enter the POI or address (→ page 315).

Entering characters on the touchpad
Requirements:

- The touchpad is switched on (→ page 293).
- The entered or selected character should be read out: the handwriting recognition read-aloud function is switched on (→ page 294).

Example: renaming favorites

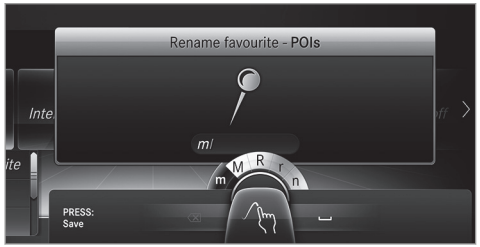

- Call up the "Renaming favorites" function (→ page 296).
- **To enter a character:** use your finger to write characters on the touchpad.
  The character is entered in the input line. If different interpretations are possible, character suggestions are displayed.
- **To select a character suggestion:** swipe up or down on the touchpad.
- Resume character input.
- **To enter a space:** swipe right when the cursor is located in the input line.
- **To delete a character:** swipe left when the cursor is located in the input line.
- **To confirm the entry:** press the touchpad.
- **To finish character entry:** swipe upwards.

or

- Press the [⮌] button.

Example: entering a destination (navigation)

- Enter the POI or address (→ page 315).

System settings

Display

Configuring display settings

Multimedia system:

→ System ▸▸ Display and Designs

Styles

- Select Designs.
- Select Sport, Classic or Progressive.

Adapting the ambient lighting for the style

- Select Adjust Amb. Lighting.
  Activate ☑ or deactivate ☐ the function.

This function adjusts the ambient lighting for the selected display style.

Setting the display brightness

- Select Display Brightness.
- Select a brightness value.

Switching the display off/on

- **To switch off:** select Display Off.
- **To switch on:** press a button, [TEL], for example.

Display design

- Select Day/Night Design.
- Select Automatic, Day Design or Night Design.

Additional display area

Depending on the vehicle, various items of additional information can be shown. The additional display area comprises the left-hand or right-hand third of the display.

- Select Additional Disp. Area.

The following display content can be selected:

- Dynamic
- Navigation Map
- Consumption
- Time and Date

Time and date

Setting the time and date automatically

Multimedia system:

System ▶▶ Time and Date

▶ Deactivate ☐ Manual Time Adjustment.
The time and date are set automatically for the selected time zone and summer time option.

ⓘ The correct time is required for the following functions:

- Route guidance with time-dependent traffic guidance.
- Calculation of expected time of arrival.

Setting the time zone

Multimedia system:

System ▶▶ Time and Date ▶▶ Time Zone:

The list of countries is displayed.

▶ Select a country ●.
Depending on the country, time zones are displayed.

▶ Select a time zone.
The time zone set is displayed after Time Zone:.

Setting summer time

The Automatic Daylight Saving Time and Daylight Saving Time options cannot be selected in all countries.

Multimedia system:

System ▶▶ Time and Date

Automatically

▶ Switch Automatic Daylight Saving Time on ☑ or off ☐.

Manually

▶ Deactivate ☐ Automatic Daylight Saving Time.

▶ Select Daylight Saving Time.

▶ Select On or Off.

Setting the time and date format

Multimedia system:

System ▶▶ Time and Date ▶▶ Set Format

▶ Set the date and time format ●.

Setting the time manually

Requirements:

- The Manual Time Adjustment function is switched on.

Multimedia system:

System ▶▶ Time and Date ▶▶ Set Time

▶ Set the hours.

▶ Navigate to the right to set the minutes.

▶ Set the minutes.

▶ Confirm changes when exiting the menu.

The date is set automatically via GPS.

Activating/deactivating voice amplification to rear passenger compartment

Requirements:

- Mercedes-Maybach vehicles and vehicles with a long wheelbase only.
- Your vehicle is equipped with the Burmester® surround sound system or the Burmester® high-end 3D surround sound system.
- The ignition is switched on.
- Doors, side windows and the panorama roof with power tilt/sliding panel are closed.

Multimedia system:

System ▸▸ Audio ▸▸ Voice Amplification to Rear

The function supports communication between the driver/front passenger and vehicle occupants in the rear passenger compartment. When voice amplification to rear passenger compartment is activated, the signals picked up by the microphone are amplified and played back over the speakers in the rear passenger compartment, depending upon vehicle noise levels. An automatic adjustment occurs based on speaker volume and ambient noise in order to improve speech intelligibility and maintain the naturalness of speech.

▶ Activate ☑ or deactivate ☐ the function.

Connectivity

Switching transmission of the vehicle position on/off

Multimedia system:

System ▸▸ Connectivity

▶ Select Transmit Vehicle Pos..

▶ Activate ☑ or deactivate ☐ the function.

Bluetooth®

Information about Bluetooth®

Bluetooth® technology is a standard for short-range wireless data transfer up to approximately 32.8 ft (10 m).

You can use Bluetooth® to connect your mobile phone to the multimedia system and use the following functions, for example:

- Hands-free system with access to the following options:
  - contacts (→ page 346)
  - call lists (→ page 348)
  - text message (→ page 349)
- Internet connection (→ page 361)
- Listening to music via Bluetooth® audio
- Transferring business cards (vCards) into the vehicle

Bluetooth® is a registered trademark of Bluetooth Special Interest Group (SIG) Inc.

ⓘ Internet connection via Bluetooth® is not available in all countries.

Activating/deactivating Bluetooth®
Requirements:

- Deactivate Bluetooth®: Apple CarPlay™ is not active.

Multimedia system:

System ▸▸ Connectivity

▶ Activate ☑ or deactivate ☐ Bluetooth®.

If Android Auto is active, a prompt appears asking whether Bluetooth® should be deactivated.

▶ Select Yes.
Android Auto is closed and Bluetooth® is deactivated.

Wi-Fi

Wi-Fi connection overview
You can use Wi-Fi to establish a connection with a Wi-Fi network and to access the Internet or other network devices.

The following connection options are available:

- Wi-Fi connection
  The Wi-Fi connection to a Wi-Fi-capable device, e.g. the customer's mobile phone or a tablet PC is established.
- Multimedia system as a Wi-Fi hotspot
  Using this function, a tablet PC or notebook can be connected, for example.

To establish a connection, you can use the following methods:

- WPS PIN
  The connection to a secure Wi-Fi network is made via a PIN.
- WPS PBC
  The connection to a secure Wi-Fi network is made by pressing a button (push button).
- Security key
  The connection to a secure Wi-Fi network is made via a security key.

Setting up Wi-Fi
Requirements:

- The device to be connected supports one of the three means of connection described (→ page 303).

Multimedia system:

System ▸▸ Connectivity

Activating/deactivating Wi-Fi

▶ Switch Wi-Fi on ☑ or off ☐.
If Wi-Fi is deactivated ☐, communication via Wi-Fi to all devices is interrupted. This also means that a connection to the HERMES communication module cannot be established. Then functions such as dynamic route guidance with Live Traffic Information are not available.

Connecting the multimedia system with a device via Wi-Fi
This function is available if a HERMES communication module is not installed.

The type of connection established must be selected on the multimedia system and on the device to be connected.

ⓘ The connection procedure may differ depending on the device. Follow the instructions that are shown in the display. Further information (see the manufacturer's operating instructions).

- Select Internet Settings.
- Select Search for Wi-Fi Networks.

Using a security key

- Select a Wi-Fi network in the list.
- Have the security key displayed on the device to be connected (see the manufacturer's operating instructions).
- Enter this security key on the multimedia system.
- Confirm the entry with ok.

ⓘ All devices support a security key as a means of connection.

Using a WPS PIN

- Highlight a Wi-Fi network in the list.
- Select Connect via WPS PIN Input.
  The multimedia system generates an eight-digit PIN.
- Enter this PIN on the device to be connected.
- Confirm the entry.

Using a button

ⓘ This function is only available in a Wi-Fi frequency of 2.4 GHz.

- Highlight a Wi-Fi network in the list.
- Select Connect via WPS PBC.
- Select "Connect via WPS PBC" in the options on the device to be connected.
- Press the WPS button on the device to be connected.
- Select Continue in the multimedia system.

Device has already been connected:

- **To automatically connect:** highlight a Wi-Fi network in the list.
- Activate Connect Automatically☑.
- **To connect:** highlight a Wi-Fi network in the list.
- Select Connect.
  The connection is established again. These functions are possible when the device has already been connected to the Wi-Fi network.

Setting up a Wi-Fi hotspot

Requirements:

- **For connection by pressing a button:** this function is only available in a Wi-Fi frequency of 2.4 GHz.

Multimedia system:

System » Connectivity

Configuring the multimedia system as a Wi-Fi hotspot

The type of connection established depends on the device to be connected. The function must be supported by the multimedia system and by the device to be connected. The type of connection established must be selected on the multimedia system and on the device to be connected.

- Select Set Up Hotspot.
- Highlight Connect Device to Vehicle Hotspot.

Generating a WPS PIN

- Select Connect via WPS PIN Generation.

- Enter the PIN shown in the media display on the device to be connected and confirm.

Connecting using a WPS PIN

- Select Connect via WPS PIN Input.
- Select Enter WPS PIN.
- Enter the PIN that is shown on the external device's display on the multimedia system.
- Select Continue.

Connecting using a button

- Select Connect via WPS PBC.
- Press the WPS button on the device to be connected or select Connect.
- Select Continue in the multimedia system.

Connecting using a security key

- Select Connect Device to Vehicle Hotspot.
  A security key is displayed.
- Select the vehicle from the device to be connected. The vehicle is displayed with the SSID MB Hotspot XXXXX.
- Enter the security key which is shown in the media display on the device to be connected.
- Confirm the entry.

Connecting using NFC

- Select Connection via NFC.
- Activate NFC on the mobile device (see the manufacturer's operating instructions).
- Bring the mobile device into the NFC area of the vehicle (→ page 344).
- Select Done.
  The mobile device is now connected to the multimedia system hotspot via NFC.

Generating a new security key:

- Select Set Up Hotspot.
- Select Generate Security Key.
  A connection will be established with the newly created security key.
- **To save a security key:** select Save.
  When a new security key is saved, all existing Wi-Fi connections are then disconnected. If the Wi-Fi connections are being re-established, the new security key must be entered.

Managing COMAND Touch devices

Requirements:

- The COMAND Touch app is installed on the external device (e.g. tablet or smartphone).
- Wi-Fi is activated (→ page 303) and the multimedia system is configured as a Wi-Fi hotspot (→ page 304).

Multimedia system:
System ▸▸ COMAND Touch

Connecting and authorizing a new device

- Select Authorize a New Device.
- Select Connect New Device.
- Enter the security key in the external device. The Please start COMAND Touch on your device and follow the instructions. message appears.
- Select Continue.
- Accept the connection request from the new device.
- Enter the PIN shown on the external device. The device is authorized.

Authorizing a connected device

- ▶ Select Authorize a New Device.
  The devices already connected are displayed.
- ▶ Select Continue Using Connected Devices.
  The Please start COMAND Touch on your device and follow the instructions. message appears.
- ▶ Select Continue.
- ▶ The connection request from the device Accept.
- ▶ Enter the PIN shown on the external device.
  The device is authorized.

De-authorizing the device

- ▶ Select an authorized device from the list.
  A prompt will appear asking whether you would like to de-authorize the selected device.
- ▶ Select Yes.
  The device is de-authorized.

Activating/deactivating child safety lock

Multimedia system:

→ System ▸▸ Parental Control

Locking the Rear Seat Entertainment System

- ▶ Select Rear Left or Rear Right.
- ▶ Select Lock.
  The Rear Seat Entertainment System is locked ☑ or unlocked ☐.

Switching off the Rear Seat Entertainment System display

- ▶ Select Rear Left or Rear Right.
- ▶ Select Display On.
- ▶ Switch the display on ☑ or off ☐.

Locking an external device

- ▶ Select an external device.
- ▶ Select Lock.
  The device connected via the COMAND Touch app is locked ☑ or unlocked ☐.

System language

Notes on the system language

This function allows you to determine the language for the menu displays and the navigation announcements. The selected language affects the characters available for entry. The navigation announcements are not available in all languages. If a language is not available, the navigation announcements will be in English.

Setting the system language

Multimedia system:

→ System ▸▸ Language

- ▶ Set the language.

ⓘ If you are using Arabic map data, the text information can also be shown in Arabic on the navigation map. To do so, select العربية as the language from the language list. Navigation announcements are then also made in Arabic.

Setting the distance unit

Multimedia system:

→ System ▸▸ Units

▶ Select km or mi.

▶ In the multifunction display of the Instrument Display, switch the Additional Speedometer display on ☑.

Data import and export

Data import/export function

The following functions are possible:

- Transferring data from one system or vehicle to another system or vehicle.
- Creating a backup copy of your personal data and loading it again.
- Protecting your personal data against unwanted export with PIN protection.

ⓘ Please note that the NTFS file system is not supported. The FAT32 file system is recommended.

Importing/exporting data

NOTE Loss of data due to premature removal

▶ Do not remove the data storage medium when data is being exported.

Mercedes-Benz is not liable for any loss of data.

Requirements:

- The vehicle is stationary.
- The ignition is switched on or the vehicle has been started.
- The SD card is inserted (→ page 369) or the USB device is connected (→ page 370).

Multimedia system:

→ System ▸▸ System Backup

▶ Select Import Data or Export Data.

Importing

▶ Select a data storage medium.
A prompt appears asking whether you really wish to overwrite the current data. If data originates from another vehicle, this is recognized during data reading.
The multimedia system is restarted once the data has been imported.

ⓘ Current vehicle settings can be edited after the import.

Exporting

If PIN protection is activated, your PIN is requested.

▶ Enter the four-digit PIN.

▶ Select a data storage medium.
The data is exported. The data export may take several minutes.

Activating/deactivating PIN protection

Requirements

To unlock the PIN:

- There is an Internet connection.
- A Mercedes me account exists at http://www.mercedes.me.
- The Personalization service is active (→ page 309).

Multimedia system:
System ▸▸ PIN Protection

Setting the PIN

- Select Set PIN.
- Enter a four-digit PIN.
- Enter the four-digit PIN again.
  If both PINs match, PIN protection is active.

Changing the PIN

- Select Change Settings.
- Enter the current PIN.
- Select Change PIN.
- Set a new PIN.

Activating PIN protection for data export

- Select Change Settings.
  Confirm with the PIN.
- Select Protect Data Export.
  Activate ☑ or deactivate ☐ the function.

Unblocking the PIN

If the PIN has been entered incorrectly three times, the PIN will be blocked. You can have a single-use password sent to you via the Mercedes me connect online portal to reset the PIN protection.

- Select Unblock PIN.
- Enter the single-use password.
  PIN protection is reset, and you can set a new PIN.

ⓘ The availability of this function is country dependent and may not be available in your country.
Alternatively, you can have PIN protection reset at an authorized Mercedes-Benz Center.

User profile

Setting a user profile

Multimedia system:
System ▸▸ Personalization

Displaying a user profile when starting

If this function is active, a prompt appears when starting the system asking which user profile to use.

- Select Display Profile Selection after Start.
- Activate ☑ or deactivate ☐ the function.

Selecting a user profile

- Select Guest Profile or individual profile ●.

ⓘ Some settings from the user profile are only loaded when the vehicle is stationary or when the ignition is switched on.

Automatic synchronization

Each time the ignition is switched off or on, the individual user profiles are synchronized on the multimedia system and on the server. This ensures that the latest user profiles are available.

- Select Automatic Synchronization.
- Activate ☑ or deactivate ☐ the function.

ⓘ For more information about importing/exporting user profiles (→ page 309).

Creating a user profile
Multimedia system:
System ▸▸ Personalization ▸▸ Create Profile

▶ Enter a name.
▶ Select OK.

The following information is saved in the user profile, for example:

- System settings
- Settings in the TV tuner's channel list
- Navigation and traffic information

The settings differ depending on the vehicle equipment.

Importing/exporting a user profile
Requirements:

- There is an Internet connection .
- A Mercedes me account exists at http://www.mercedes.me.
- The Personalization service is active.

Multimedia system:
System ▸▸ Personalization ▸▸ Manual Export/Import

This function is not available in all countries.

Only individual profiles can be imported or exported.

The individual profiles are always collectively imported or exported.

▶ **To import:** select Import Profiles from Server.
The The profile data import overwrites all existing profile data. Do you want to continue? message appears.
▶ Select Yes.
User profiles are imported.
▶ **To export:** select Export Profiles to the Server.
User profiles are exported.

ⓘ Certain settings, such as address book entries or previous destinations from the navigation system, are not exported.

Setting user profile options
Multimedia system:
System ▸▸ Personalization

▶ Highlight a profile.
▶ Select options.

The following options are available:

- Rename
- Delete
- Reset

ⓘ The guest profile cannot be deleted or renamed.

Software update

Information on software updates
The multimedia system provides a message when an update is available.

Depending on the source, you can perform various updates:

Software update

Source of the update	Update type
Updates via mobile phone	Navigation map, system updates, Digital Operator's Manual
Updates via an external storage medium, e.g. a USB flash drive	Navigation maps

ⓘ Updates via mobile phone require an active Internet connection for the vehicle. This is not available in all countries. For further information on connecting to the Internet, see (→ page 361).

Advantages of updating software

Software updates ensure your vehicle's technology is up-to-date.

In order to constantly improve the quality of our services you will receive future updates for your multimedia system, the Mercedes me connect services and your vehicle's communication module. These will conveniently be sent to you via the mobile phone connection in your vehicle and, as an option, installed automatically. You can monitor the status of your updates on the Mercedes me portal and find information about potential innovations.

Your advantages at a glance:

- Conveniently receive software updates via the mobile phone network
- Improves the quality and availability of Mercedes me connect services
- Keeps your multimedia system and communication module up-to-date

Further information about software updates can be found at http://me.mercedes-benz.com

Performing a software update

Requirements:

- There is an Internet connection (→ page 361).
- **For automatic updates:** your vehicle has a permanently installed communication module.

Multimedia system:

System ▸▸ Software Update

Automatic update

▶ Switch Automatic Online Update on ☑. Updates are performed.

The current status of the updates is displayed.

Manual update

▶ Deactivate ☐ Automatic Online Update.

▶ Select an update from the list and start the update.

Activating the software update

▶ Restart the system.

Function of important system updates

Important system updates may be necessary for the security of your multimedia system's data. Please install these updates, otherwise the security of your multimedia system cannot be ensured.

ⓘ If automatic software updates are activated, the system updates will be downloaded automatically (→ page 310).

As soon as an update is available for download, a corresponding message appears on the media display.

You have the following selection options:

- Download

  The update will be downloaded in the background.
- Details

  Information about the pending system update is displayed.
- Later

  The update can be downloaded manually at a later time (→ page 310).

If the download is completed and the update is ready for installation, you will be informed of this after the next ignition cycle, for example.

ⓘ Park the vehicle safely in a suitable location before starting the installation.

Requirements for the installation:

- The ignition is switched on.
- The engine is not running.
- Notes and warnings have been read and accepted.
- The parking brake is applied.

If all requirements are met, the update will be installed. The multimedia system cannot be operated while the update is being installed and vehicle functions are restricted.

If errors should occur during the installation, the multimedia system automatically attempts to restore the previous version. If restoration of the previous version is not possible, a symbol appears on the multimedia system display. Please consult a qualified specialist workshop to resolve the problem.

Reset function

Multimedia system:

System ▸▸ Reset

Personal data is deleted, for example:

- Station presets
- Connected mobile phones

▶ Select Yes.

If PIN protection is activated, a prompt appears asking if you also wish to restore this to the factory settings during a reset.

▶ Select Yes.

▶ Enter the current PIN.
The PIN is reset.

or

▶ Select No.
The current PIN stays the same after resetting.

ⓘ If you have forgotten your PIN, an authorized Mercedes-Benz Center can deactivate the PIN protection for you.

A prompt appears again asking whether you really wish to reset.

▶ Select Yes.
The multimedia system is reset to the factory settings.

Fit & Healthy

ENERGIZING COMFORT

Overview of the ENERGIZING COMFORT program
Program overview

Program	Function
Refresh	Can make targeted changes to the interior climate to refresh vehicle occupants. Cooling airflow and ionization purify the air. The vehicle interior is illuminated with cool colors and the seats are ventilated.
Warmth	Can increase the comfort level of the vehicle occupants. The vehicle's panel, seat and steering wheel heating produce a cozy warmth. The air is purified using ionization and a pleasant fragrance is released. The vehicle interior is illuminated with warm lighting.
Vitality	Can counteract diminishing attentiveness in monotonous driving situations. Fast-paced music and a vitalizing massage provide invigorating stimulation for the vehicle occupants. The air is purified using ionization and a pleasant fragrance is released. The vehicle interior is illuminated in a stimulating hue and the seat is ventilated.

Program	Function
Pleasure	Can promote a positive mood in the vehicle occupants as well as mental and physical regeneration. Moderately fast music is played and a massage program is activated. The air is purified using ionization and a pleasant fragrance is released. The vehicle interior is illuminated with amicable lighting.
Well being	Can aid the physical and mental relaxation of vehicle occupants. A back massage combined with local warmth provide relaxation. The air is purified using ionization and a pleasant fragrance is released. The audio player plays selections of calming music and the vehicle interior is illuminated with pleasant lighting.
Training	Can counteract the onset of muscle tension, limbs falling asleep or stress with targeted relaxation or stimulation exercises. The exercises are demonstrated in short videos. The air is purified using ionization and a pleasant fragrance is released. The vehicle interior is illuminated with lighting appropriate to the exercise.

ⓘ Please note that the available program and the associated functions depend on your vehicle equipment. Depending on your equipment, fewer functions may be available.

Starting the ENERGIZING Comfort program
Requirements:

- The ignition is switched on.

ⓘ ENERGIZING Comfort is available approximately five minutes after starting the multimedia system.

Multimedia system:

Vehicle ▸▸ ENERGIZING Comfort

Selecting a seat

▶ Select Seat Selection.

▶ Select the desired seat or All Seats ☑.

Starting a program

▶ Select Refresh, Warmth, Vitality, Enjoyment or Well-being.

The selected program will run for ten minutes.

Configuring a program

▶ Call up further options for the desired program.

▶ Switch the functions included in the program on ☑ or off ☐.

Starting training

- ▶ Select Training.
- ▶ Select Muscle Relaxation, Muscle Stimulation or Balance.
  The selected training video starts and is displayed in the media display.
- ▶ Select Full Screen: Video.
  The training video is displayed in full screen.

ⓘ For more information on pausing or skipping through videos, see (→ page 371).

If, during an active program, a function requirement is no longer met, a corresponding message appears. The active program is canceled.

Navigation

Switching navigation on

Multimedia system:

↳ Navigation

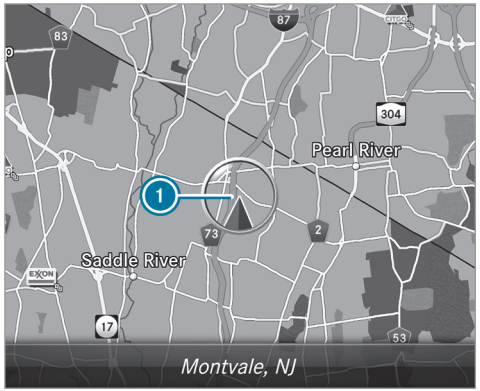

- ▶ Alternatively: press the NAVI button.
  The map appears and shows current vehicle position 1.

ⓘ If a climate control setting is changed, a climate bar appears briefly.

Showing/hiding the navigation menu

Requirements:

- The map shows the vehicle's current position.

Multimedia system:

→ Navigation

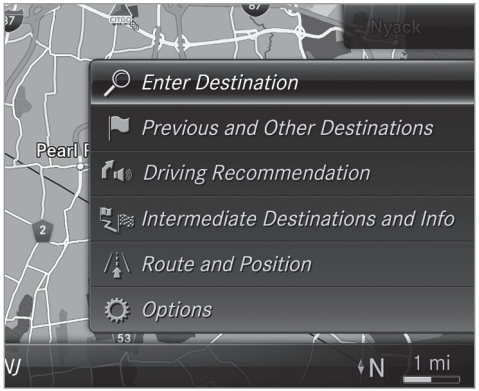

▶ **To show:** swipe left on the touchpad or the Touch Control.

or

▶ Slide the controller to the left.

▶ **To hide:** swipe right on the touchpad or the Touch Control.

or

▶ Slide the controller to the right.

ⓘ To show or hide lower menu levels, swipe or slide to the left or right as many times as necessary.

Destination entry

Entering a POI or address

⚠ **WARNING** Risk of distraction from information systems and communications equipment

If you operate information and communication equipment integrated in the vehicle when driving, you will be distracted from the traffic situation. This could also cause you to lose control of the vehicle.

▶ Only operate this equipment when the traffic situation permits.

▶ If you cannot be sure of this, stop the vehicle whilst paying attention to road and traffic conditions and operate the equipment with the vehicle stationary.

You must observe the legal requirements for the country in which you are currently driving when operating the multimedia system.

Requirements:

- **For the online search:** Mercedes me connect is available.
- You have a user account for the Mercedes me portal.
- The service is available.
- The service has been activated at an authorized Mercedes-Benz Center.

Further information can be found at: http://www.mercedes.me

Multimedia system:

→ Navigation

▶ Show the navigation menu.

▶ Select [🔍] Enter Destination .

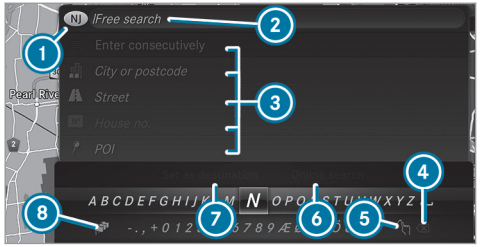

The state or province in which the vehicle is located is set 1.

There are two available methods of destination entry:

- Free search 2
- Search step-by-step 3

Method 1: free search

▶ Enter the POI or address in 2. The entries can be made in any order.
During destination entry, suggestions are made by the multimedia system. A selection of destinations appears in a list.

Enter these address elements, for example:

- City, street, house number
- Street, city
- ZIP code
- POI name
- POI category, e.g. Gas Station
- City, POI name

▶ **To switch to handwriting recognition:** select [ ] 5.

▶ Write the character on the touchpad.

▶ **To switch to character selection:** press the [ ] button.

or

▶ Press the touchpad.

▶ **To delete an entry:** select [X] 4 (if available).

Use the following options:

- Press briefly: deletes the last character entered or the last suggestion adopted.
- Press and hold: deletes the entire entry.

▶ **To set the language:** select [ ] 8.

▶ Select the language.

ⓘ This function is useful for countries in which several character sets are supported. An example is Russia, which uses Cyrillic and Latin characters.

▶ **To call up the online search function:** select Online Search 6.
Once an Internet connection is established, a list appears. It shows online destinations related to the previous entry.

Online destinations are provided by the Internet service provider.

▶ Select the online destination.

or

▶ Enter the online destination or a 3 word address in the input line.

ⓘ Enter a 3 word address (→ page 320). Online search is not available in all countries.

▶ **To call up the list:** press the [ ] button.

or

- If the top line of the character bar is highlighted, navigate upwards.
- Select the destination in the list.
- **To adopt a destination:** select ⑦ Select Destination .
  If there are several listings for a destination, a list appears.
- Select the destination.
  The destination address is shown.

Method 2: search step-by-step

- Press [⮌] button.

or

- If the top line of the character bar is highlighted, navigate upwards.
  The character bar is hidden. City or ZIP is highlighted. Additional entry fields, e.g. for POI, are available.
- Select City or ZIP.
  The character bar appears.
- Enter the city or the ZIP code.
  During destination entry, suggestions are made by the multimedia system. A selection of destinations appears in a list.

The address entries can be made in any order, for example:

- City or ZIP, Street, House No.
  Enter an intersecting street, if available.
- Street, City or ZIP
- POI, e.g. Gas Station, City or ZIP

ⓘ During destination entry, use the following functions:

- Switch to handwriting recognition.
- Switch to character selection.
- Delete an entry.
  An entry, e.g. POI, can be deleted with [⊗] in a step-by-step search. Navigate to the left to do so.
- Call up the online search function (if available).
- Call up a list.

The functions are described in the free search.

- **To change the state/province:** select the state or the province.
- Enter the state or the province. You only need to enter the first character.
- Select the state or the province in the list.
- **To change the country:** select the country.
- Enter the country. You only need to enter the first character.
- Select the country on the list.
- **To adopt a destination:** select Select Destination.
  If there are several listings for a destination, a distance-orientated list appears.
- Select the destination.
  The destination address is shown.

Selecting previous destinations

Multimedia system:

→ Navigation

» [⚑] Previous and Other Destinations

- Select Previous Destinations.
- Select the destination.
  The destination address is shown.

or

- ▶ If favourites have been saved already (→ page 329), select From My Favorites.
- ▶ Select the favourite.
  The destination address is shown.

Selecting a POI

Multimedia system:

→ Navigation
» Previous and Other Destinations
» POIs

- ▶ Select the category.

or

- ▶ Select All Categories and the category.
  If route guidance is not active: the search begins in the vicinity of the current vehicle position. The list is sorted by distance in ascending order.

  The POIs show the following information:
  - name of POI
  - linear distance to the POI
  - the direction of the linear distance to the POI (arrow) is displayed when searching for the vehicle's current position
- ▶ Select the POI.
- ▶ **Route guidance is active:** select the search position prior to choosing a POI (see example).
- ▶ If intermediate destinations are set, these can also be selected as the search position after selecting Near Destination.

Filtering displays for POIs

- ▶ Enter the search term in Search:.
  The results list shows relevant POIs.
- ▶ Select ok.
  The first POI in the list is highlighted.
- ▶ Select the POI.

Example: setting the search position for the parking category during active route guidance

- ▶ Select In the Vicinity, Near Destination or Along the Route.
  The list shows the located POIs or opens an overview of the route destination after selecting Near Destination.
- ▶ Select the POI.
- ▶ Select Near Destination: select the intermediate destination or the destination.

Starting an automatic gas station search

Requirements:

- The automatic gas station search is activated ☑ (→ page 324).

Driving situation

Route guidance is active. The fuel level in the fuel tank reaches the reserve fuel level.

The Reserve Fuel Do you want to start a search for surrounding gas stations? message is shown.

- ▶ Select Yes.
  The automatic gas station search begins. The available gas stations along the route or in the vicinity of the vehicle's current position are displayed.
- ▶ Select the gas station.
  The address of the gas station is displayed.
- ▶ If route guidance is not active, select Start Route Guidance.
  The selected gas station is set as the destination. Route guidance begins.

or

▶ If route guidance is active, select Start New Route Guidance or Set as Next Way Point.
Start New Route Guidance: the selected gas station is set as a new destination. The previous destinations and intermediate destinations are deleted. Route guidance to the gas station begins.

Set as Next Way Point: the selected gas station is set as the next intermediate destination. Route guidance begins.

▶ **If there are already four intermediate destinations:** select Yes in the prompt.
The selected gas station is entered into position 1 of the intermediate destinations menu. Intermediate destination 4 is deleted. Route guidance begins.

Entering an intermediate destination
Requirements:

- A destination is entered.

Multimedia system:

Navigation ▸▸ Way Points and Info

▶ Select Search for Way Point.

▶ Enter the intermediate destination as a POI or address (→ page 315).

▶ Select the intermediate destination.

▶ Select Set as Destination.

or

▶ Select an intermediate destination using Enter Destination during route guidance.

▶ Select Set as Next Way Point after entering the destination.

Editing intermediate destinations
Requirements:

- The destination and at least one intermediate destination have been entered.

Multimedia system:

Navigation ▸▸ Way Points and Info

▶ **To call up the map:** highlight the destination or the intermediate destination.

▶ Select Map .

▶ Move the map (→ page 334).

▶ Select destination on the map (→ page 321).

▶ **To change the order of destinations:** highlight the destination or the intermediate destination.

▶ Select Move .

▶ Move the intermediate destination to the desired position.

▶ Press the Touch Control, the controller or the touchpad.

▶ **To delete a destination:** highlight the destination or the intermediate destination.

▶ Select Delete.

Calculating a route with intermediate destinations
Requirements:

- The destination and at least one intermediate destination have been entered.

Multimedia system:

Navigation ▸▸ Way Points and Info

▶ Select Start New Route Guidance.
The route is calculated with the set intermediate destinations.

Selecting a contact for destination entry
Requirements:

- A mobile phone is connected to the multimedia system (→ page 341).
- Contacts have been downloaded (→ page 346).

Multimedia system:

→ Navigation
» Previous and Other Destinations
» Contacts

▶ Select the contact.
The contact details are displayed.

▶ Select the address.
The Please Wait... message appears.

The search is carried out first online and then in the multimedia system database.

▶ Select the destination.

Filtering displays for contacts

▶ Enter a name or telephone number, for example, into the search field.

▶ Select ok.
The first contact in the list is highlighted.

▶ Select the contact.

▶ Select the address.

Entering geo-coordinates
Multimedia system:

→ Navigation
» Previous and Other Destinations
» Geo-coordinates

▶ Enter geo-coordinates as latitude and longitude coordinates in degrees, minutes and seconds.
The map shows the position.

▶ Confirm the entry.

▶ **To calculate a route:** select Start Route Guidance.

▶ If a route has already been created, select Start New Route Guidance or Set as Way Point.

Entering the destination as a 3 word address
Requirements:

- Searching for a destination using 3 word addresses is possible in the online search (→ page 315).
- There is an Internet connection.

ⓘ Searching for a destination using 3 word addresses is not possible in all countries.

Multimedia system:

→ Navigation » Enter Destination

▶ Select Online Search.

▶ Enter the destination address as a 3 word address. Separate each of the words with a full stop.
The search results are displayed.

▶ Select the destination in the list.
The destination address is shown. The route can be calculated.

ⓘ 3 word addresses from what3words are an alternative addressing system for multilingual georeferencing of global locations with a resolution of three meters. Using this grid, locations on the Earth's surface are included which do not have a building address such as street and house number, for example.

The Empire State Building has this language dependent 3 word address:

- English: **parade.help.bleat**
- French: **commun.verbe.bisquer**
- Spanish: **suertes.diga.pesca**

3 word addresses are unique, easy to remember and suffice for most routine applications.

You can convert addresses to 3 word addresses and back again:

- At the website http://what3words.com
- In the what3words apps

Selecting a destination on the map

Multimedia system:

Navigation ▸▸ Options

▶ Select Map Menu.

or

▶ If the map is displayed in full screen mode, press the central control element.
The map menu appears.

▶ Select "move map" in map menu ② (→ page 333).

▶ Swipe in any direction on the Touch Control or touchpad.

or

▶ Slide the controller in any direction.
The map moves in the corresponding direction under the crosshair. The more you move your finger away from the starting position on the touchpad, the faster the map moves.

▶ Select the destination in the list.
The destination address is shown.

Setting the map orientation to 2D or 3D

▶ Highlight Map Orientation: 2D/3D.

▶ Press the Touch Control, the touchpad or the controller.
The map will be displayed in the selected map orientation.

Showing traffic messages in the vicinity of the map

▶ Select Traffic Messages for the Vicinity.
The map appears.

▶ Swipe left or right on the touchpad.

or

▶ Slide the controller to the left or right.
The previous or next traffic incident is highlighted on the map. Information on the traffic incident is displayed.

ⓘ Traffic reports are not available in all countries.

Showing POIs in the vicinity of the map

▶ Select POIs in the Vicinity.

▶ Swipe left or right on the touchpad.

or

▶ Slide the controller to the left or right.
The previous or next POI is highlighted on the map. The name or the address is shown.

▶ **To filter the display by POI category:** swipe down on the Touch Control or the touchpad.

or

▶ Slide the controller down.

▶ Select the POI category.

ⓘ User Defined allows personal POI symbols to be selected (→ page 335).

Route

Calculating a route

Requirements:

- The destination has been entered.
- The destination address is shown.

▶ If route guidance is not active, select Start Route Guidance.
The route to the destination is calculated. The map shows the route. Route guidance then begins.

or

▶ If route guidance is active, select Start New Route Guidance or Set as Next Way Point.
Start New Route Guidance: the selected destination address is set as a new destination. The previous destinations and intermediate destinations are deleted. Route guidance to the new destination begins.

Set as Next Way Point: the selected destination address is set as the next intermediate destination. Route guidance begins.

Taking alternative routes into consideration

▶ Select an alternative route (→ page 324).

Other menu functions

▶ **To save the destination:** select Store in "Previous Destinations".

▶ **To display on the map:** select Map.

▶ **To call a telephone number:** select Call (if available).

▶ **To call up an Internet address:** select www (if available).

Selecting a route type

Multimedia system:

→ Navigation ▸▸ Route and Position

▶ Select Route Settings.

▶ Select the route type.
If route guidance is active, the new route is calculated with the new route type.

If route guidance is not active, the next route is calculated with the new route type.

You can choose from the following route types:

- Eco Route

  An economical route is calculated. The journey time may be somewhat longer than for quicker routes.

  The symbol for the current vehicle position is displayed in green.

- Fast Route

  A route with a quick journey time is calculated.

- Short Route

  A route with a short driving distance is calculated.

Automatic Traffic Jam Avoidance can be switched on ☑ or off ☐ for these route types. If Automatic Traffic Jam Avoidance is switched on, Ask in the Event of Traffic Jam Avoidance can be selected.

The Automatic Traffic Jam Avoidance and Ask in the Event of Traffic Jam Avoidance settings are not available in every country.

The settings enable the following:

- Automatic Traffic Jam Avoidance

  The route is calculated with the currently set route type.

  Traffic reports via Live Traffic Information are taken into account.

  Live Traffic Information is not available in all countries.
- Ask in the Event of Traffic Jam Avoidance

  A prompt appears when a new route is detected with a shorter journey time based on traffic reports. You can continue to use the current route or use the dynamic route instead.

Selecting route options

Multimedia system:

→ Navigation ▸▸ Route and Position ▸▸ Avoid Options

Avoiding areas

▶ Select Areas (→ page 336).

Avoiding highways, ferries, motorail trains, tunnels, unpaved roads

▶ Select ☑ or deselect ☐ avoid option.

Using toll roads

▶ Select Use Toll Roads.

▶ Select Cash or Electronic Billing or Off.
The route takes into account roads that require the payment of a usage fee (toll).

If Off is selected, toll roads are not taken into account.

The selected route options cannot always be implemented. Therefore, a route may include a ferry, for instance, even though the avoid Ferries option is enabled. A message appears and you will hear a corresponding message.

Using carpool lanes

▶ Select Number of Occupants in the Vehicle.

▶ Select number.
When using carpool lanes, observe the applicable legal requirements as well as any conditions pertaining to when and where such lanes may be used. Carpool lanes may only be used if certain conditions are met.

These route options are not available in every country.

Selecting notifications

Multimedia system:

→ Navigation ▸▸ Options ▸▸ Announcements

▶ Switch an announcement on ☑ or off ☐.

You can choose from the following announcements:

- Announce Traffic Warnings

  This function is not available in all countries.
- Announce Street Names

  The multimedia system announces the names of the roads that will follow the upcoming change of direction.

  This function is not available in all countries and languages.

Displaying destination information

Requirements:

- A destination is entered.

Multimedia system:

→ Navigation

▶ Select Way Points and Info.

The following information is displayed:

- Intermediate destinations and destination

  The route can also include up to four intermediate destinations.
- Name, address
- Remaining driving distance
- Time of arrival

Selecting an alternative route

Multimedia system:

→ Navigation ▸▸ Route and Position

▶ Select Alternative Route.

The routes are displayed in accordance with the setting made in the route settings.

The currently selected route is shown with a dark blue line.

▶ Select the alternative route.

Switching the automatic gas station search on/off

Multimedia system:

→ Navigation ▸▸ Options

▶ Switch Reserve Fuel on ☑ or off ☐.

Switched on ☑: when the fuel reserve level is reached, a prompt appears asking whether you want to start searching for gas stations.

Using automatic gas station search

Requirements:

The automatic gas station search is activated ☑ (→ page 324).

The prompt Reserve Fuel Do you want to start a search for surrounding gas stations? appears.

▶ Select Yes.

The automatic gas station search begins. The available gas stations along the route or in the vicinity are displayed.

▶ Select the gas station.

▶ When there is no route, the gas station is set as the destination.

or

▶ When there is a route, the gas station is set as the next intermediate destination.

Starting the automatic service station search

Requirements:

- ATTENTION ASSIST and the Suggest Rest Area function are activated (→ page 251).

Driving situation

The ATTENTION ASSIST Do you want to search for a rest area? message is shown.

▶ Select Yes.

The service station search starts. The available service stations along the route or in the vicinity of the vehicle's current position are displayed.

▶ Select the service station.

The service station address is displayed.

▶ If route guidance is not active, select Start Route Guidance.

The selected service station is set as a destination. Route guidance begins.

or

▶ If route guidance is active, select Start New Route Guidance or Set as Next Way Point.
Start New Route Guidance: the selected service station is set as a new destination. The previous destination and all intermediate destinations are deleted. Route guidance to the service station begins.

Set as Next Way Point: the selected service station is set as the next intermediate destination. Route guidance begins.

Route guidance

Notes on route guidance

⚠ **WARNING** Risk of distraction from operating integrated communication equipment while the vehicle is in motion

If you operate communication equipment integrated in the vehicle when driving, you will be distracted from the traffic situation. This could also cause you to lose control of the vehicle.

▶ Only operate this equipment when the traffic situation permits.

▶ If you cannot be sure of this, stop the vehicle whilst paying attention to road and traffic conditions and operate the equipment with the vehicle stationary.

You must observe the legal requirements for the country in which you are currently driving when operating the multimedia system.
Route guidance begins once a route has been calculated.

The road and traffic rules and regulations always have priority over multimedia system driving instructions.

The following driving instructions can be used:

- Navigation announcements
- Route guidance displays
- Lane recommendations

If you do not follow the driving instructions or if you leave the calculated route, a new route is calculated automatically.

Driving instructions may differ from the actual road and traffic conditions if:

- The route is diverted
- The direction of a one-way street has been changed

For this reason, you must always observe road and traffic rules and regulations during your journey as well as the prevailing traffic conditions.

The route may differ from the ideal route due to the following:

- Roadworks
- Incomplete digital map data

Notes on GPS reception

The correct function of the navigation system depends amongst other things on GPS reception. In certain situations GPS reception can be impaired, defective or even not possible, e.g. in tunnels or in parking garages.

Changing direction overview

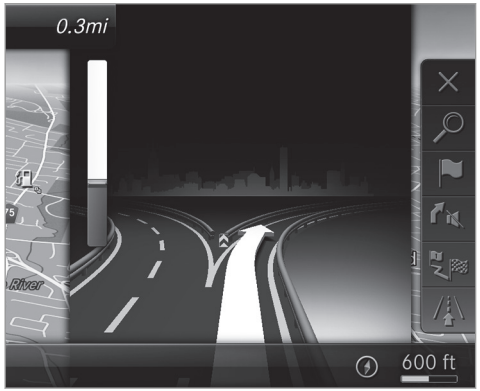

There are three phases when changing direction:

- Preparation phase

  If there is enough time between the changes of direction, the multimedia system prepares you for the upcoming change of direction. A navigation announcement is issued, e.g. "Prepare to turn right".

  The map appears in full-screen mode.

- Announcement phase

  The multimedia system announces the upcoming change of direction, e.g. by announcing "Turn right in 300 ft (100 m)".

  The display is split into two parts. The map is displayed on the left; on the right, there is a detailed image of the intersection or a 3D image of the upcoming change of direction.

- Change-of-direction phase

  The multimedia system announces the imminent change of direction, e.g. by announcing "Now turn right".

  The display is split into two parts.

  The vehicle has successfully changed direction when the light-color bar on the right drops down to 0 feet (0 m) and the current vehicle position symbol has reached the highlighted change-of-direction point.

  When the change of direction is complete, the map appears in full-screen mode.

ⓘ Changes of direction are also shown in the Instrument Display.

Lane recommendations overview

This display appears for multi-lane roads.

If the digital map contains the relevant data, the multimedia system can display lane recommendations for the next two changes of direction.

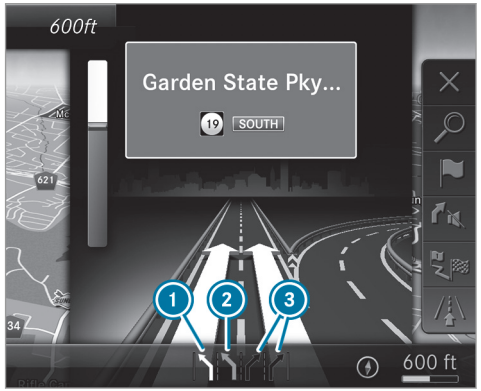

1. Recommended lane
2. Possible lane
3. Lanes not recommended

The following lanes are displayed:

- Recommended lane ①

  In this lane, you will be able to complete both the next change of direction and the one after that.
- Possible lane ②

  In this lane, you will only be able to complete the next change of direction.
- Lane not recommended ③

  In this lane, you will not be able to complete the next change of direction without changing lane.

During the change of direction, new lanes may be added.

ⓘ Lane recommendations can also be displayed in the Instrument Display and in the Head-up Display.

Overview of destination reached

Once the destination is reached, you will see the [🏁] checkered flag. Route guidance is finished.

When an intermediate destination has been reached, you will see the intermediate destination flag with the number of your [📍] intermediate destination. After this, route guidance is continued.

Switching navigation announcements on/off

Requirements:

- Route guidance is active.

▶ **To switch off:** press the volume control on the multifunction steering wheel during a navigation announcement (→ page 297).

or

▶ Press the volume control on the center console during a navigation announcement (→ page 297).
The Voice Guidance has been deactivated. message appears.

or

▶ Show the navigation menu (→ page 314).

▶ Select [🔊] Voice Guidance .
The symbol changes to [🔇].

▶ **To activate:** select [🔇] Voice Guidance .
The current navigation announcement is played.

ⓘ In the following situations, navigation announcements are switched on automatically:

- A new route guidance is started.
- The route is recalculated.

ⓘ You can add and call up this function as a favorite under Voice Guidance On/Off.

Switching navigation announcements on/off during a phone call

▶ Select System.

▶ Select [🚗] Audio.

▶ Select Navigation and Traffic Announcements.

▶ Switch Voice Guidance During Call on ☑ or off ☐.

Adjusting the volume of navigation announcements

Requirements:

- Route guidance is active.

▶ **On the multifunction steering wheel or on the multimedia system:** turn the volume

control on the multifunction steering wheel during a navigation announcement.

or

▶ Turn the volume control on the center console during a navigation announcement (→ page 297).

ⓘ In the following situations, the volume is raised to the maximum volume or lowered to the minimum volume:

- A new route guidance is started.
- The route is recalculated.

ⓘ The minimum volume can be individually set at an authorized Mercedes-Benz Center.

▶ **Via system settings:** select System.

▶ Select Audio.

▶ Select Navigation and Traffic Announcements.

▶ Select Voice Guidance Volume.

▶ Set the volume.

▶ **To switch audio fadeout on/off during navigation announcements:** select System.

▶ Select Audio.

▶ Select Navigation and Traffic Announcements.

▶ Switch Audio Fadeout During Voice Guidance on ☑ or off ☐.

Repeating navigation announcements
Requirements:

- A route has already been created.
- Route guidance is active.

Multimedia system:

→ Navigation

▶ Select Voice Guidance .

▶ Select Voice Guidance .
The current navigation announcement is repeated.

ⓘ You can add and call up this function as a favorite under Repeat Voice Guidance.

Canceling route guidance
Requirements:

- A route has already been created.
- Route guidance is active.

Multimedia system:

→ Navigation

▶ Select X Cancel Route Guidance.

Overview of route guidance to an off-road destination

An off-road destination is within the digital map. The map contains no roads that lead to the destination.

You can enter geo-coordinates or a three word address for off-road destinations on the map. Route guidance guides you for as long as possible with navigation announcements and displays on roads that are known to the multimedia system.

Shortly before you reach the last known position on the map, you will hear the "Please follow the direction arrow" announcement. The display shows a direction arrow and the linear distance to the destination.

Overview of route guidance from an off-road location to a destination
Off-road position: the current vehicle position is located within the digital map on roads that are not available.

When route guidance begins the following displays appear:

- The Road Not Mapped message is shown.
- A direction arrow showing the linear direction to the POI.

When the vehicle is back on a road known to the multimedia system, route guidance continues as normal.

Overview of off-road status during route guidance
Due to roadworks, for example, there may be differences between the data on the digital map and the actual course of the road. In such cases, the multimedia system will temporarily be unable to locate the vehicle's current position on the digital map. The vehicle is off-road.

When the vehicle is off-road, the following displays are shown:

- the Road Not Mapped message
- a direction arrow showing the linear direction to the POI

When the vehicle is back on a road known to the multimedia system, route guidance continues as normal.

Destination

Saving the current vehicle position
Multimedia system:

Navigation

▶ If the map is displayed in full screen mode, press the central control element.
The map menu appears.

▶ Select ① on the map menu (→ page 333).
The current vehicle position is saved to the "Previous destinations" memory.

Storing a map position
Multimedia system:

Navigation

The map is in full-screen mode.

▶ Press the Touch Control, the controller or the touchpad.

▶ Select "move map" in map menu ②
(→ page 333).

▶ Select a position on the map.
If multiple entries are available for a map position, a list appears.

▶ Highlight an entry.

▶ Select Store in "Previous Destinations" .
The map position is saved to the "Previous destinations" memory.

Editing the previous destinations
Multimedia system:

Navigation

» Previous and Other Destinations

» Previous Destinations

▶ Highlight one of the previous destinations.

- **To save as a favorite:** select Save My Favorite .
  The favorites are displayed.
- Move the favorite to the desired position.
  If a favorite has already been added at this position, it will be overwritten.
- **To save as "Home" address:** select Save as "Home" .
- **To save as "Work" address:** select Save as "Work" .
- **To delete a single or all destinations:** select Delete or Delete All.
  A prompt appears.
- Select Yes.
- **To display destination information:** select Details.

Using external destinations

External destinations can be received from the following sources:

- Mercedes-Benz Apps
- Door-to-door navigation with Companion app (USA)
- Rear Seat Entertainment System

ⓘ Received destinations are saved in the previous destinations.

A prompt appears on the media display.

- **A destination has been received without picture information:** select Yes.
- If route guidance is not active, select Start Route Guidance.
  The route to the destination is calculated. The map shows the route. Route guidance then begins.

or

- If route guidance is active, select Start New Route Guidance or Set as Next Way Point.
  Start New Route Guidance: the received destination address is set as a new destination. The previous destinations and intermediate destinations are deleted. Route guidance to the new destination begins.

  Set as Next Way Point: the received destination address is set as the next intermediate destination. Route guidance begins.
- **A destination has been received with picture information:** select Start Route Guidance.
  Route guidance starts.

Route guidance with current traffic reports

Traffic information overview

Traffic reports are received using Live Traffic Information and are used for route guidance.

This service is unavailable in some countries.

There may be differences between the traffic reports received and the actual road and traffic conditions.

Important information on Live Traffic Information:

- Current traffic reports are received via the Internet connection.
- The traffic situation is updated at short, regular intervals.
- The subscription information shows the status (→ page 331).

Information on the vehicle's position is regularly sent to Mercedes-Benz AG. The data is immediately rendered anonymous by Mercedes-Benz AG and forwarded to the traffic data provider. Using this data, traffic reports relevant to the vehicle's position are sent to the vehicle. The vehicle acts as a sensor for the flow of traffic and helps to improve the quality of the traffic reports.

If you do not wish to transmit your vehicle position, you can have this service deactivated at an authorized Mercedes-Benz Center.

Displaying subscription information
Requirements:

- The vehicle is equipped with Live Traffic Information.

Multimedia system:

→ Navigation ▸▸ ⚙ Options

The subscription expiration date is automatically displayed:

- one month before the expiration date.
- one week before the expiration date.
- on the expiration date.

▶ **To display manually:** select Live Traffic Subscription Info.

Depending on the status, one of the following messages appears:

- the period of validity for the subscription is displayed.
- the subscription has expired.

ⓘ The subscription can be extended:

- at an authorized Mercedes-Benz Center
- via an MB Info call to the Mercedes-Benz Customer Assistance Center

Displaying the traffic map
Requirements:

- For Live Traffic Information: the vehicle is equipped with a communication module featuring an activated, integrated SIM card.
- When the vehicle is started, the communication module automatically establishes an Internet connection. Traffic information is made available shortly afterwards.

Multimedia system:

→ Navigation ▸▸ ⚙ Options ▸▸ Map Menu

▶ Alternatively: if the map is displayed in full screen mode, press the Touch Control, the controller or the touchpad.
The map menu appears.

▶ Activate ☑ 🚗.

The traffic map shows the following information, for example:

- Traffic incidents, for example:
  - Roadworks
  - Road blocks
  - Warning messages

  The symbols for traffic incidents are displayed in color (on the route) or gray (off the route).
- Traffic flow information:
  - Traffic jam (red line)
  - Slow-moving traffic (orange line)
  - Heavy traffic (yellow line)

- Free-flowing traffic (green line)
- Display for traffic delays on the route lasting at least one minute
- Warning message symbols:
  - Symbol ⚠
  - Additional road safety notes when approaching a traffic incident, e.g. the end of a traffic jam

    If the vehicle approaches a danger area on the route, a warning message is displayed on the map. A warning message may also be issued (→ page 332).

Displaying traffic incidents

Multimedia system:

Navigation ▸▸ ⚙ Options ▸▸ Map Content

▶ Activate ☑ Traffic Incidents.
Roadworks, road blocks, local area reports (e.g. fog) and warning messages are displayed.

Activating free flow and traffic display

▶ Activate ☑ Free Flowing Traffic and Traffic Delays.

ⓘ The traffic delay is displayed for the current route. Traffic delays lasting one minute or longer are taken into consideration.

Displaying details

▶ Displays the traffic map (→ page 331).

▶ Moves the map (→ page 334).

▶ When a traffic report symbol is under the crosshair, press on the central control element.
The traffic report details are displayed.

or

▶ Press on the central control element.

▶ Select Information on Traffic Reports.
The map shows the traffic report symbols in the vicinity.

Traffic report information is displayed in the status line:

- Traffic report symbol
- Reason for the traffic report, e.g. traffic congestion
- Warning message (highlighted in red)

▶ **To select a traffic report symbol:** select Next or Previous.

▶ Press on the central control element.
The traffic report details are displayed.

Issuing hazard warnings

Multimedia system:

Navigation ▸▸ ⚙ Options ▸▸ Announcements

▶ Activate ☑ Announce Traffic Warnings.
Warning messages are issued and tailbacks which pose a risk are announced.

Map and compass

Map and compass overview

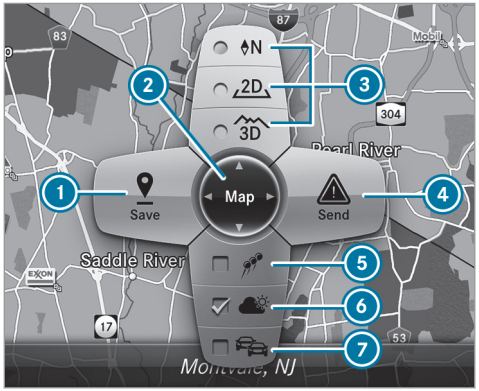

1. Saves the current vehicle position
2. Moves the map
3. Selects the map orientation and map view
4. Selects the function depending on the equipment:
   - Sends a hazard warning via Car-to-X.
   - Filters the display of POIs in the vicinity according to POI category
5. Switches the display of personal POI symbols on the map on or off
6. Switches one of the following displays on or off depending on the equipment:
   - Weather information
   - Satellite map
   - Traffic incidents
7. Switches the traffic map display on or off

The map and satellite images are shown in globe projection. This allows for a realistic map display in all map scales. The map uses elevation modeling.

Depending on the map data, important buildings in many cities are depicted realistically on the map in small map scales (e.g. 1/32 mi (20 m), 1/16 mi (50 m)). Other buildings are shown as models.

ⓘ You can set the unit of measurement of the map scale (→ page 307).

If online information is available, fuel prices and the availability of parking spaces in parking garage are displayed, for example.

ⓘ Requirements:
- Mercedes me connect is available.
- You have a user account for the Mercedes me portal.
- The service has been activated at an authorized Mercedes-Benz Center.

Further information can be found at: http://www.mercedes.me

ⓘ The online information is not available in all countries.

If Display in COMAND is activated in Traffic Sign Assist (→ page 253), speed limits and overtaking restrictions are displayed on the map.

ⓘ Company logos displayed on the map are trademarks of the respective companies and used solely for the purpose of indicating the locations of these companies. The use of such logos on the map does not indicate approval of, support of or advertising by these companies for the navigation system itself.

Setting the map scale
Requirements:

- The map is shown.

Multimedia system:

→ Navigation

▶ **To zoom in:** swipe down on the Touch Control.

or

▶ Turn the controller counter-clockwise.

or

▶ Move two fingers apart on the touchpad.
▶ **To zoom out:** swipe up on the Touch Control.

or

▶ Turn the controller clockwise.

or

▶ Move two fingers together on the touchpad.

ⓘ You can set the unit of measurement of the map scale (→ page 307).

Moving the map
Multimedia system:

→ Navigation ▸▸ ⚙ Options
▸▸ Map Menu

▶ Alternatively, if the map is displayed in full screen mode, press the central control element.
The map menu appears.

▶ Select "Move map" in map menu ② (→ page 333).
▶ Swipe in any direction on the Touch Control or touchpad.

or

▶ Slide the controller in any direction.
The map moves in the corresponding direction under the crosshair. The further you move your finger away from the starting position on the touchpad, the faster the map moves.

Selecting the map orientation
Multimedia system:

→ Navigation ▸▸ ⚙ Options
▸▸ Map Menu

▶ Alternatively, if the map is displayed in full screen mode, press the central control element.
The map menu appears.

▶ In map menu ③ , select N, 2D or 3D(→ page 333).
- N: the 2D map view is displayed so that north is always at the top.
- 2D: the 2D map view is aligned to the direction of travel.
- 3D: the 3D map view is aligned to the direction of travel.

Selecting POI symbols
Multimedia system:
→ Navigation ▸▸ ⚙ Options ▸▸ Map Content

POIs include gas stations and hotels which can be displayed as symbols on the map, for example. Not all POIs are available everywhere.

▶ Select POI Symbols.
The • dot indicates the current setting.

Standard displays symbols of predefined categories on the map.

User Defined allows you to personally select the symbols for the available categories.

None switches the display off.

▶ Select a setting.

▶ User Defined: select categories.
The POI symbols of the selected categories are displayed ☑ or not displayed ☐.

Selecting the display of text information in the map
Multimedia system:
→ Navigation ▸▸ ⚙ Options ▸▸ Text Information

▶ Select text information.
Current Street shows the street you are currently driving on at the bottom of the display.

When the map is moved, the following information appears under the crosshair:

- Street name
- POI name
- Area name

Geo-coordinates displays the following information:

- Longitude and latitude
- Elevation
  The elevation shown may deviate from the actual elevation.
- Number of satellites from which a signal can be received

When the map is moved, this information does not appear.

Climate Control displays the current climate control settings.

None switches the display off.

Displaying the next intersecting street
Requirements:

- Route guidance is not active.

Multimedia system:
→ Navigation ▸▸ ⚙ Options

▶ Activate ☑ Next Intersecting Street.
The name of the next intersecting street will be displayed at the upper edge of the display.

Displaying the map version
Multimedia system:
→ Navigation ▸▸ ⚙ Options

▶ Select Map Version.

▶ Select Details.

ⓘ Information about new versions of the digital map can be obtained from an authorized Mercedes-Benz Center.

Overview of avoiding an area
You can define areas along a route that you would like to avoid.

The route can include an area that is to be avoided in the following situations:

- the destination is located in an area that is to be avoided
- if freeways are located within the area that is to be avoided

  Freeways are always taken into account for the route.
- there is no sensible alternative route

Avoiding a new area
Multimedia system:

Navigation ▸▸ Route and Position ▸▸ Avoid Options ▸▸ Areas

▶ Select Avoid New Area.

▶ **To search for an area via the map:** select Using Map.

▶ Move the map.

or

▶ **To search for an area using an address:** select Address Entry.

▶ Enter the address.

▶ Select Select Destination.
The map appears.

▶ **To display an area:** press the Touch Control, the touchpad or the controller.
A red rectangle appears. This designates the area that should be avoided.

▶ **To change the size of the area:** swipe up or down on the Touch Control or the touchpad.

or

▶ Slide the controller up or down.
The map scale is enlarged or reduced and changes the size of the area.

▶ **To set the area:** press the Touch Control, the touchpad or the controller.
The area is entered into the list.

Changing an area
Multimedia system:

Navigation ▸▸ Route and Position ▸▸ Avoid Options ▸▸ Areas

▶ Highlight an area in the list.

▶ Select Edit.

Moving the area on the map

▶ Swipe in any direction on the Touch Control or touchpad.

or

▶ Slide the controller in any direction.

Changing the size of the area

▶ **To start:** press the Touch Control, the touchpad or the controller.

▶ **To change:** swipe up or down on the Touch Control or the touchpad.

or

▶ Slide the controller up or down.

▶ **To stop:** press the Touch Control, the touchpad or the controller.

Taking the area for the route into account

▶ Avoid ☑ an area in the list.
If route guidance is active, a new route is calculated.

If there is no route yet, the setting is carried over to the next route guidance.

Deleting one or all areas

Multimedia system:

→ Navigation ▸▸ Route and Position ▸▸ Avoid Options ▸▸ Areas

▶ Highlight an area in the list.

▶ Select Delete or Delete All.

▶ Confirm the prompt with Yes.
One or all areas are deleted.

Map data update overview

Updating at an authorized Mercedes-Benz Center

The digital maps generated by the map software become outdated in the same way as conventional road maps. Optimal route guidance can only be provided by the navigation system in conjunction with the most up-to-date map data.

Information about new versions of the digital map can be obtained from an authorized Mercedes-Benz Center.

You can have updates to the digital map implemented there.

ⓘ Additional costs can be incurred in this connection.

Online map update

The online map update service from Mercedes me connect can be used to update map data.

ⓘ The online map update service is not available in all countries.

The following options are available for the update:

- The automatic map update updates map data for one region.

  For automatic map updates Automatic Online Update must be activated in the system settings (→ page 310).
- The manual map update updates map data for several or all regions.

Further information on the online map update is available at an authorized Mercedes-Benz Center or at https://www.mercedes.me.

Further information on updates: https://manuals.daimler.com/baix/cars/connectme/en_GB/index.html.

Overview of map data

Your vehicle is supplied with map data at the factory. Depending on the country, map data for your region is either pre-installed or the map data is supplied on a data storage medium.

If the map data on your vehicle has been installed at the factory and you wish to reinstall it, you do not need to enter the activation code.

For map data that you have purchased in the form of a data storage medium, you must enter the accompanying activation code.

ⓘ If you save the map data on a data storage medium with the online map update service, no entry is required. The activation code is stored on the data storage medium during the downloading process.

Observe the following when entering the activation code:

- The activation code can be used for one vehicle
- The activation code is not transferable
- The activation code has six digits

In the event of the following problems, please contact an authorized Mercedes-Benz Center:

- The multimedia system does not accept the activation code
- You have lost the activation code

Displaying the compass

Multimedia system:

Navigation ▸▸ Route and Position

▶ Select Compass.

The compass display shows the following information:

- the current direction of travel with bearing (360° format) and compass direction
- longitude and latitude coordinates in degrees, minutes and seconds
- height (rounded)
- number of GPS satellites from which a signal can be received

Setting the map scale automatically

Multimedia system:

Navigation ▸▸ Options

The map scale is set automatically depending on your driving speed.

For journeys in cities with detailed city models, a map view from the driver's perspective is used.

▶ Switch Auto Zoom on ☑ or off ☐.

ⓘ The automatically selected map scale can be changed manually for a short time. The setting is reset automatically after a few seconds.

Displaying the satellite map

Multimedia system:

Navigation ▸▸ Options ▸▸ Map Content

▶ Switch Satellite Map on ☑ or off ☐.

or

▶ If satellite map display ⑥ is available in the map menu, switch it on ☑ or off ☐ (→ page 333).

Switched on ☑: satellite maps are displayed in map scales of 2 mi (2 km) or less.

Switched off ☐: satellite maps are not displayed in map scales from 2 mi (2 km) to 10 mi (10 km).

ⓘ Satellite maps for these map scales are not available in all countries.

Displaying weather information

Requirements:

- Mercedes me connect is available.
- You have a user account for the Mercedes me portal.
- The service is available.
- The service has been activated at an authorized Mercedes-Benz Center.

Further information can be found at: http://www.mercedes.me

Multimedia system:
→ Navigation ▸▸ ⚙ Options
▸▸ Map Content

▶ Activate Weather Information ☑.

or

▶ If weather information display ⑥ is available in the map menu, activate ☑ (→ page 333) it.
Current weather information is displayed on the navigation map, e.g. temperature or cloud cover.

ⓘ Weather information is not available in all countries.

Calling up the Digital Operator's Manual (navigation)

Calling up information on navigation
Multimedia system:
→ Navigation ▸▸ ⚙ Options
▸▸ Navigation Info

▶ Select the topic.

Telephone

Telephony

Notes on telephony

⚠ **WARNING** Risk of distraction from operating integrated communication equipment while the vehicle is in motion

If you operate communication equipment integrated in the vehicle when driving, you will be distracted from the traffic situation. This could also cause you to lose control of the vehicle.

▶ Only operate this equipment when the traffic situation permits.

▶ If you cannot be sure of this, stop the vehicle whilst paying attention to road and traffic conditions and operate the equipment with the vehicle stationary.

⚠ **WARNING** Risk of an accident from operating mobile communication equipment while the vehicle is in motion

Mobile communications devices distract the driver from the traffic situation. This could also cause the driver to lose control of the vehicle.

▶ As the driver, only operate mobile communications devices when the vehicle is stationary.

▶ As a vehicle occupant, only use mobile communications devices in the areas intended for this purpose, e.g. in the rear passenger compartment.

You must observe the legal requirements for the country in which you are currently driving when operating mobile communication equipment in the vehicle.
Further information can be obtained from an authorized Mercedes-Benz Center or at:
https://www.mercedes-benz-mobile.com/

Telephone menu overview

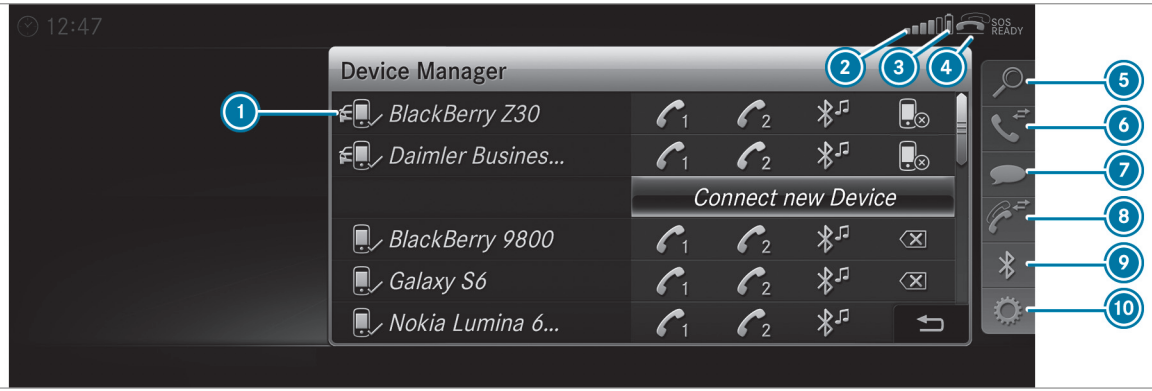

1. Bluetooth® device name of the currently connected mobile phone
2. Signal strength of the mobile phone network for the currently connected and selected mobile phone
3. Battery status of the currently connected and selected mobile phone
4. (telephone ready) or (call active)
5. Contacts (→ page 346)
6. Recent Calls (→ page 348)
7. Text Message
8. One mobile phone connected: Active Call.
   Two mobile phones connected: changes view between telephone 1 and 2 or Active Call
9. Devices (→ page 341)
10. Options

Symbols 1 to 4 are not shown until after a mobile phone has been connected to the multimedia system. The symbols depend on your mobile phone and your mobile phone network provider.

Bluetooth® profile overview

Bluetooth® profile of the mobile phone	Function
PBAP (**P**hone **B**ook **A**ccess **P**rofile)	Contacts are automatically displayed in the multimedia system
MAP (**M**essage **A**ccess **P**rofile)	Message functions can be used

Telephony operating modes overview

Depending on your equipment, the following telephony operating modes are available:

- A mobile phone is connected to the multimedia system via Bluetooth® (→ page 341).
- Two mobile phones are connected with the multimedia system via Bluetooth® (two phone mode) (→ page 342).

Information on telephony

The following situations can lead to the call being disconnected while the vehicle is in motion:

- There is insufficient network coverage in the area
- You move from one GSM or UMTS transmitter/receiver area (cell) into another and no communication channels are free
- The SIM card used is not compatible with the network available
- A mobile phone with "Twincard" is logged into the network with the second SIM card at the same time

The multimedia system supports calls in HD Voice® for improved speech quality. A requirement for this is that the mobile phone and the mobile phone network provider of the person you are calling support HD Voice® .

Depending on the quality of the connection, the voice quality may fluctuate.

Connecting a mobile phone (Bluetooth® telephony)

Requirements:

- Bluetooth® is activated on the mobile phone (see the manufacturer's operating instructions).
- Bluetooth® is activated on the multimedia system (→ page 303).

Multimedia system:

→ Phone ▸▸ Devices

Searching for a mobile phone

▶ Select Connect New Device.

▶ Select Start Search on System.
The available mobile phones are displayed. If a new mobile phone is found, it is indicated by the [ ] symbol.

Connecting a mobile phone (authorization using Secure Simple Pairing)

▶ Select the mobile phone.
A code is displayed in the multimedia system and on the mobile phone.

▶ **If the codes match:** confirm the code on the mobile phone.

Connecting a mobile phone (authorization by entering a passkey)

▶ Select the mobile phone.

▶ Choose a one to sixteen-digit number combination as a passkey.

▶ **On the multimedia system:** enter the passkey and select OK.

▶ **On the mobile phone:** enter the passkey again and confirm.

ⓘ Up to 15 mobile phones can be authorized on the multimedia system.
Authorized mobile phones are reconnected automatically.

Connecting a second mobile phone (two phone mode)
Requirements:

- At least one mobile phone is already connected to the multimedia system via Bluetooth®.

Multimedia system:
Phone ▸▸ Devices

▶ Select Connect New Device.

▶ Select Start Search on System.
The available mobile phones are displayed.

▶ Select the mobile phone.

▶ Answer the How would you like to connect the new device? prompt.

▶ **To replace the currently connected mobile phone:** select Phone 1.
The currently connected mobile phone is replaced by the new mobile phone.

or

▶ **To connect the second mobile phone:** select Phone 2.
The new mobile phone is connected as Phone 2. If two mobile phones have already been connected, the second telephone is replaced by the new mobile phone.

or

▶ **To use the mobile phone as an audio source:** select Audio Source (→ page 376).

ⓘ A mobile phone can be operated both as an audio source as well as telephone in parallel.

ⓘ It is possible at any future point to change the type of connection for the mobile phone already connected and to set this as Phone 1, Phone 2 or Audio Source (→ page 342).

Functions of the mobile phone in two phone mode

Functions overview

Mobile phone in the foreground	Mobile phone in the background
Full range of functions	Incoming calls

Interchanging mobile phones (two phone mode)
Requirements:

- The mobile phones are authorized (→ page 341).

Multimedia system:

→ Phone ▸▸ ᛒ Devices

▶ In the device overview, select a mobile phone which has already been authorized and set as Phone 1 or Phone 2.

After interchanging the mobile phones, the mobile phone in the foreground is replaced by the mobile phone in the background.

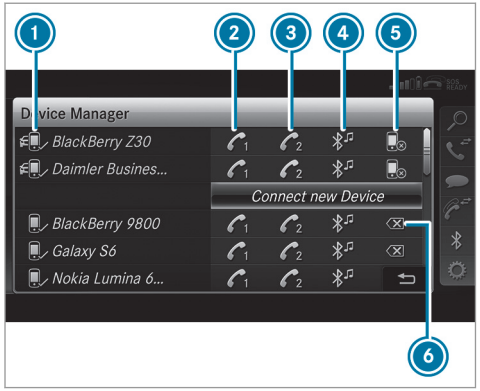

1. Bluetooth® device name of the currently connected mobile phone
2. Connects a mobile phone as Phone 1
3. Connects a mobile phone as Phone 2
4. Connects a mobile phone as Audio Source
5. Disconnecting a mobile phone(→ page 343)
6. De-authorizing a mobile phone(→ page 343)

ⓘ If a new mobile phone is connected and defined as Phone 1, for example, this overwrites the previously connected mobile phone in the foreground of the system.

Disconnecting a mobile phone

Multimedia system:

→ Phone ▸▸ ᛒ Devices

▶ Select the [ ] symbol in the line of the mobile phone.
The disconnection of the mobile phone takes place without a confirmation prompt. The mobile phone remains authorized in the system.

De-authorizing a mobile phone

Multimedia system:

→ Phone ▸▸ ᛒ Devices

▶ Select the [X] symbol in the line of the mobile phone.

▶ Answer the confirmation prompt with Yes.
The mobile phone is de-authorized and deleted from the system.

Information on Near Field Communication (NFC)

NFC enables short-range wireless data transfer or (re)connection of a mobile phone with the multimedia system.

The following functions are available without having authorized a mobile phone:

- Transferring a URL to be viewed in the multimedia system (see the manufacturer's operating instructions).
- Setting up the vehicle's Wi-Fi access data via the system settings (→ page 304).

Further information can be found at: https://www.mercedes-benz-mobile.com/

Using the mobile phone with Near Field Communication (NFC)

Requirements:

- NFC is activated on the mobile phone (see the manufacturer's operating instructions)
- The mobile phone's screen is switched on and unlocked (see the manufacturer's operating instructions)

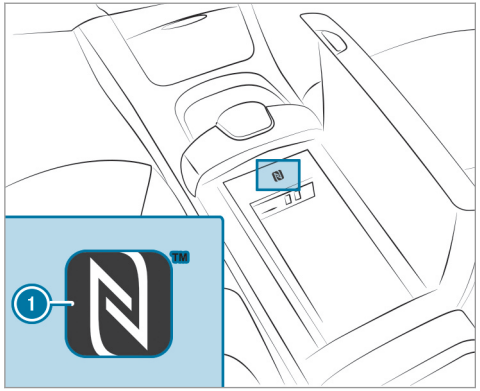

▶ **To connect a mobile phone:** open the cover of the armrest on the center console.

▶ Place the NFC area of the mobile phone (see manufacturer's operating instructions) on NFC logo 1.
The mobile phone is connected to the multimedia system.

▶ **To change mobile phones:** place the NFC area of the mobile phone on NFC logo 1.
If the mobile phone has already been authorized on the multimedia system, it is now connected.

If the mobile phone is authorized on the multimedia system for the first time, it is connected after confirming the mobile phone instructions (see the manufacturer's operating instructions).

Further information can be found at: https://www.mercedes-benz-mobile.com/

Setting the reception and transmission volume

Requirements:

- A mobile phone is authorized (→ page 341).

Multimedia system:

Phone ▸▸ Options ▸▸ Phone

This function ensures optimal language quality.

▶ Select Reception Volume or Transmission Volume.

▶ Set the volume.

Further information on the recommended reception and transmission volume: https://www.mercedes-benz-mobile.com/

Adjusting the call and ringtone volume
Multimedia system:
System ▸▸ Audio ▸▸ Phone

▶ Select Call Volume or Ringtone Volume.
▶ Set the volume.

Starting/stopping mobile phone voice recognition
Requirements:

- The mobile phone is connected to the multimedia system (→ page 341).

Starting mobile phone voice recognition

▶ Press and hold the button on the multifunction steering wheel for more than one second.
You can use mobile phone voice recognition.

Stopping mobile phone voice recognition

▶ Press the or button on the multifunction steering wheel.

Calls

Using the telephone
Multimedia system:
Phone ▸▸ Contacts

Making a call

▶ Select Numerical Keypad.
▶ Enter the number.
▶ Select .
The call is made.

Accepting a call

▶ Select Accept.

Rejecting a call

▶ Select Reject.

Ending a call

▶ Select .

Activating functions during a call

▶ To show all functions, navigate down.

The following functions are available during a call:

- End Call
- Make Additional Call
- Keyboard (show to send DTMF tones)
- Switch Mute Mic on ☑ or off ☐.
- Private Mode (an active call in hands-free mode is transferred over to the telephone)

Conducting calls with several participants
Requirements:

- There is an active call (→ page 345).
- Another call is being made.

Switching between calls

▶ Select call ●.
The selected call is active. The other call is on hold.

Activating or ending a call on hold

▶ Select Continue Call or End Call.

Conducting a conference call

▶ Select Create Conference Call in the telephone menu.
The new participant is included in the conference call.

Ending an active call

▶ Select ☎.

ⓘ On some mobile phones, the call on hold is activated as soon as the active call is ended.

Accepting/rejecting a waiting call

Requirements:

- There is an active call (→ page 345).

If you receive a call while already in a call, a message is displayed. An acoustic signal also sounds.

▶ Select Accept.
The incoming call is active.

If only one mobile phone is connected with the multimedia system, the previous call will be put on hold.

If during a call you accept a call with the other mobile phone when in two phone mode then the existing call is ended.

▶ Select Reject.

ⓘ This function and behavior depends on your mobile phone network provider and the mobile phone (see the manufacturer's operating instructions).

Contacts

Information about the contacts menu

The contacts menu contains all contacts from existing data sources, e.g. mobile phone or memory card. You can store up to 6,000 contacts.

Depending on the data source, you have the following number of contacts:

- Permanently saved contacts: 3,000 entries
- Contacts loaded from the mobile phone: 3,000 entries

From the contacts menu, you can perform the following actions:

- Using the telephone:
  - Calling a contact (→ page 348)
  - Calling a new number (→ page 345)
- Navigation (→ page 320)
- Compose messages (→ page 349)

If a mobile phone is connected to the multimedia system (→ page 341) and automatic calling up (→ page 346) is activated, the mobile phone's contacts are displayed in the address book.

Downloading mobile phone contacts

Multimedia system:

Phone ▸▸ ⚙ Options ▸▸ Contacts

Automatically

▶ Switch Synchronize Contacts Automatically on ☑.

Manually

▶ Deactivate ☐ Synchronize Contacts Automatically.

▶ Select Synchronize Contacts.

Calling up contacts
Multimedia system:
→ Phone ▸▸ Contacts

Depending on the character set, the following options can be used to search for contacts:

- searching by initials
- searching by name
- searching by phone number

▶ Enter characters into the search field.
A selection of possible contacts appears.
Entering more characters into the search field narrows down the number of possible selections.

▶ Select the contact.

A contact can contain the following details:

- phone numbers
- navigation addresses
- geo-coordinates
- Internet address

Editing the format of a contact's name
Multimedia system:
→ Phone ▸▸ Options ▸▸ Contacts ▸▸ Name Format

The following options are available:

- Last Name, First Name
- Last Name First Name
- First Name Last Name

▶ Select an option.

Overview of importing contacts

Contacts from various sources

Source	Requirements
Memory card	The SD memory card is inserted.
USB device	The USB device is inserted in the USB port.
Bluetooth® connection	If the sending of vCards via Bluetooth® is supported, vCards can be received on mobile phones or netbooks, for example. Bluetooth® is activated in the multimedia system and on the respective device (see the manufacturer's operating instructions).
Mobile phone	The mobile phone is connected to the multimedia system.

Importing contacts into the contacts menu
Multimedia system:
→ Phone ▸▸ Options ▸▸ Contacts

▶ Select Import.

▶ Select an option.

Saving a mobile phone contact
Multimedia system:
→ Phone ▸▸ Contacts

- ▶ Select the mobile phone contact .
- ▶ Select .
- ▶ Select Save to Vehicle.
  The contact saved in the multimedia system is identified by the symbol.

Calling a contact
Multimedia system:
→ Phone ▸▸ Contacts

- ▶ Enter characters into the search field.
- ▶ Select the contact.
- ▶ Select the telephone number.
  The number is dialed.

Selecting further options in the contacts menu
Multimedia system:
→ Phone ▸▸ Contacts

- ▶ Select a contact.
- ▶ Select .

Depending on the stored data, the following options are available:

- Call
- Send Text Message
- Show Website (if an Internet address has been stored)
- Navigate (if an address has been stored)
- Save My Favorite
- Send DTMF Tones (for a number with DTMF tones)

- ▶ Select an option.

Deleting a contact
Multimedia system:
→ Phone ▸▸ Contacts

You can delete contacts stored in the vehicle.

- ▶ Search for the contact.
- ▶ Select the contact.
- ▶ Select .
- ▶ Select Delete Contact.
- ▶ Select Yes.

Call list

Call list overview
Depending on whether your mobile phone supports the PBAP Bluetooth® profile or not, this can have different effects on the presentation and functions of the call list.

If the PBAP Bluetooth® profile is supported, the effects are as follows:

- The call lists from the mobile phone are displayed in the multimedia system.
- When connecting the mobile phone, you may have to confirm the connection for the PBAP Bluetooth® profile.

If the PBAP Bluetooth® profile is not supported, the effects are as follows:

- The multimedia system generates its own call lists.
- The call list is not synchronized with the call lists in the mobile phone.

Making a call from the call list
Multimedia system:
→ Phone ▸▸ Recent Calls

▶ Select a number.
The call is made.

Text messages

Overview of text message functions
If the connected mobile phone supports the MAP Bluetooth® profile, the text message functions can be used on the multimedia system.

You can obtain further information about settings and supported functions of Bluetooth®-capable mobile phones from an authorized Mercedes-Benz Center or at: https://www.mercedes-benz-mobile.com/

Some mobile phones require further settings after being connected to the multimedia system (see manufacturer's operating instructions).

New messages are identified by the symbol in the media display and an audible signal.

Depending on the mobile phone, the multimedia system only displays new incoming text messages or the 100 newest text messages.

Configuring the text messages displayed
Multimedia system:
→ Phone ▸▸ Options ▸▸ Text Message ▸▸ Message Display

▶ Select .
A menu with the following options is shown:
- All Messages
- New and Unread Messages
- New Messages
- Off (The text messages are not displayed automatically.)

▶ Select an option.

ⓘ The setting may not be active until the mobile phone is reconnected.

Reading text messages
Multimedia system:
→ Phone ▸▸ Text Message

Reading a text message

▶ Select a text message.
The message text is displayed.

Using the read-aloud function

▶ Select a text message.

▶ Select Read Aloud.
The text message is read aloud.

Composing and sending a text message
Multimedia system:
→ Phone ▸▸ Text Message

▶ Select Write New Text Message.

Adding a recipient

▶ Select Press to Add Recipient.

▶ Select the contact.

Dictating text

▶ Select Press to Dictate.

- **To start the dictation function:** press on the central control element.
  The app for the dictation function is loaded.

  If there was no prior Internet connection, a connection is now established.
- Say the message.
  The dictation ends automatically after you have finished speaking.

  After the voice message has been processed, it is shown as text.
- **To replace a message:** select Replace message.
  The text that has been dictated and shown on the display is reset and can be dictated again.

Editing text

- Select the word.
- **To call up the correction menu:** press on the central control element.

  The following options are available:
  - Adjusting the capitalization of words (if supported by the character set)
  - Expanding the choice of words
  - Deleting the selection
  - Recording a new dictation
- **To leave the menu:** select Done.

Sending text messages

- Select Send Text Message.

Replying to a text message

Multimedia system:

Phone ▸▸ Text Message

- Open the text message.
- Select [≡].
- Select Reply.

Calling a text message sender

Multimedia system:

Phone ▸▸ Text Message

- Open the text message.
- Select [≡].
- Select Call Sender.

Deleting text messages

Multimedia system:

Phone ▸▸ Text Message

- Select [≡].
- **To delete a text message:** select Delete.
- Outbox

or

- Select Drafts.

Mercedes-Benz link

Overview of Mercedes-Benz Link

> ⚠ **WARNING** Risk of distraction from information systems and communications equipment
>
> If you operate information and communication equipment integrated in the vehicle when driving, you will be distracted from the traffic situation. This could also cause you to lose control of the vehicle.
>
> - Only operate this equipment when the traffic situation permits.

▶ If you cannot be sure of this, stop the vehicle whilst paying attention to road and traffic conditions and operate the equipment with the vehicle stationary.

Using Mercedes-Benz Link, various functions and selected mobile phone apps can be transferred to the media display.

The Mercedes-Benz Link control box supplementary equipment is required for this. You can obtain this at an authorized Mercedes-Benz Center.

ⓘ The Mercedes-Benz Link control box uses the Android operating system.

ⓘ The service provider is responsible for these apps and the services and content connected to it.

Connecting Mercedes-Benz Link with the multimedia system

▶ Connect the Mercedes-Benz Link control box with the [USB] USB port of the multimedia connection unit using a suitable connecting cable.

ⓘ A suitable connecting cable is available separately at an authorized Mercedes-Benz Center.

Using Mercedes-Benz Link
Requirements:

- The Mercedes-Benz Link control box is connected with the multimedia system using the [USB] USB port.

Multimedia system:

→ Connect ▸▸ Mercedes-Benz Link

▶ Select MB Link.
The mobile phone functions and apps are available and shown on the media display.

You can find more information in the Mercedes-Benz Link control box operating instructions.

Ending Mercedes-Benz Link
Multimedia system:

→ Connect ▸▸ Mercedes-Benz Link

▶ Select Disconnect.
The connection is ended.

The mobile phone continues to be supplied with electricity.

or

▶ Disconnect the connecting cable between the Mercedes-Benz Link control box and the multimedia system.

ⓘ Mercedes-Benz recommends disconnecting the connecting cable only when the vehicle is stationary.

Apple CarPlay®

Overview of Apple CarPlay®

⚠ **WARNING** Risk of distraction from information systems and communications equipment

If you operate information and communication equipment integrated in the vehicle when driving, you will be distracted from the traffic situation. This could also cause you to lose control of the vehicle.

- ▶ Only operate this equipment when the traffic situation permits.
- ▶ If you cannot be sure of this, stop the vehicle whilst paying attention to road and traffic conditions and operate the equipment with the vehicle stationary.

You must observe the legal requirements for the country in which you are currently driving when operating the multimedia system.

iPhone® functions can be used via the multimedia system using Apple CarPlay®. They are operated using the central control element or the Siri® voice-operated control system. You can activate the voice-operated control system by pressing and holding the button on the multifunction steering wheel.

When using Apple CarPlay® via the voice-operated control system, the multimedia system can still be operated via the Voice Control System (→ page 277).

Only one mobile phone at a time can be connected via Apple CarPlay® to the multimedia system.

The availability of Apple CarPlay® may vary according to the country.

The service provider is responsible for this application and the services and content connected to it.

Apple CarPlay® is a registered trademark of Apple Inc.

Information on Apple CarPlay®

While using Apple CarPlay® various functions of the multimedia system, e.g. telephony or the media sources Bluetooth® audio and iPod®, are unavailable.

Only one route guidance can be active at a time. If route guidance is active on the multimedia system, it is closed when route guidance is started on the mobile phone.

Connecting an iPhone® via Apple CarPlay® Requirements:

- Apple® operating system version iOS 8.3 or above is installed on the iPhone®.
- An Internet connection is required for the full range of functions for Apple CarPlay®.
- The iPhone® is connected to the multimedia system via the USB port using a suitable cable (→ page 370).

Multimedia system:

Connect ▸▸ Apple CarPlay

Setting automatic or manual start

A message appears when connected for the first time.

- ▶ **Automatic start:** select Automatically. Start Automatically is activated ☑.

  Apple CarPlay® will now start immediately after the iPhone® is connected to the multimedia system using a USB cable.
- ▶ **Manual start:** select Manually.
- ▶ Select the iPhone® in the device list.

Accepting/rejecting the data protection regulations

A message with the data protection regulations appears.

- ▶ Select Accept & Start.

or

▶ Select Decline & End.

Exiting Apple CarPlay®

▶ Press the [⌂] button on the multifunction steering wheel, for example.

ⓘ If Apple CarPlay® was not displayed in the foreground before disconnecting, the application starts in the background when reconnected. You can call up Apple CarPlay® in the main menu.

Calling up Apple CarPlay® sound settings
Multimedia system:

Connect ▸▸ Apple CarPlay ▸▸ Sound

▶ Select the sound menu (→ page 387).

Ending Apple CarPlay®
Multimedia system:

Connect ▸▸ Apple CarPlay

▶ Select Disconnect.
The connection is ended.

The mobile phone continues to be supplied with electricity.

or

▶ Disconnect the connecting cable between the mobile phone and multimedia system. Mercedes-Benz recommends disconnecting the connecting cable only when the vehicle is stationary.

Android Auto

Android Auto overview

⚠ **WARNING** Risk of distraction from information systems and communications equipment

If you operate information and communication equipment integrated in the vehicle when driving, you will be distracted from the traffic situation. This could also cause you to lose control of the vehicle.

▶ Only operate this equipment when the traffic situation permits.

▶ If you cannot be sure of this, stop the vehicle whilst paying attention to road and traffic conditions and operate the equipment with the vehicle stationary.

You must observe the legal requirements for the country in which you are currently driving when operating the multimedia system.
Mobile phone functions can be used with Android Auto using the Android operating system on the multimedia system. It is operated using the central control element or the voice control. You can activate the voice-operated control system by pressing and holding the [🗣] button on the multifunction steering wheel.

When using Android Auto via the voice-operated control system, the multimedia system can still be operated via the Voice Control System (→ page 277).

Only one mobile phone at a time can be connected via Android Auto to the multimedia system.

The availability of Android Auto and Android Auto Apps may vary according to the country.

The service provider is responsible for this application and the services and content connected to it.

Information on Android Auto
While using Android Auto, various functions of the multimedia system, for example the media source Bluetooth® audio, are not available.

Only one route guidance can be active at a time. If route guidance is active on the multimedia system, it is closed when route guidance is started on the mobile phone.

Connecting a mobile phone via Android Auto
Requirements:

- The first activation of Android Auto on the multimedia system must be carried out when the vehicle is stationary for safety reasons.
- The mobile phone supports Android Auto from Android 5.0.
- The Android Auto app is installed on the mobile phone.
- In order to use the telephone functions, the mobile phone must be connected to the multimedia system via Bluetooth® (→ page 341).

  If there was no prior Internet connection, this is established with the use of the mobile phone with Android Auto.
- The mobile phone is connected to the multimedia system via the USB port [ ] using a suitable cable (→ page 370).
- An Internet connection is required for the full range of functions for Android Auto.

Multimedia system:

Connect ▸▸ Android Auto

▶ Select the mobile phone from the device list.

Accepting/rejecting the data protection regulations
A message with the data protection regulations appears.

▶ Select Accept & Start.

or

▶ Select Decline & End.

Activating automatic start

▶ Select Start Automatically ☑.

Starting manually

▶ Select the mobile phone from the device list.

Exiting Android Auto

▶ Press the [ ] button on the multifunction steering wheel, for example.

ⓘ If Android Auto was not displayed in the foreground before disconnecting, the application starts in the background when reconnected. You can call up Android Auto in the main menu.

Calling up the Android Auto sound settings
Multimedia system:

Connect ▸▸ Android Auto ▸▸ Sound

▶ Select the tone menu (→ page 387).

Ending Android Auto
Multimedia system:

Connect ▸▸ Android Auto

▶ Select Disconnect.
The connection is ended.

The mobile phone continues to be supplied with electricity.

or

▶ Disconnect the connecting cable between the mobile phone and multimedia system. Mercedes-Benz recommends disconnecting the connecting cable only when the vehicle is stationary.

Transferred vehicle data with Android Auto and Apple CarPlay®

Overview of transferred vehicle data

When using Android Auto or Apple CarPlay®, certain vehicle data is transferred to the mobile phone. This enables you to get the best out of selected mobile phone services. Vehicle data is not directly accessible.

The following system information is transmitted:

- Software release of the multimedia system
- System ID (anonymized)

The transfer of this data is used to optimize communication between the vehicle and the mobile phone.

To do this, and to assign several vehicles to the mobile phone, a vehicle identifier is randomly generated.

This has no connection to the vehicle identification number (VIN) and is deleted when the multimedia system is reset (→ page 311).

The following driving status data is transmitted:

- Transmission position engaged
- Distinction between parked, standstill, rolling and driving
- Day/night mode of the instrument cluster

The transfer of this data is used to alter how content is displayed to correspond to the driving situation.

The following position data is transmitted:

- Coordinates
- Speed
- Compass direction
- Acceleration direction

This data is only transferred while the navigation system is active in order to improve it (e.g. so it can continue functioning when in a tunnel).

Mercedes me calls

Making a call via the overhead control panel

Requirements:

- You have access to a GSM network.
- The contract partner's GSM network coverage is available in the respective region.
- The ignition is switched on so that vehicle data can be transferred automatically.

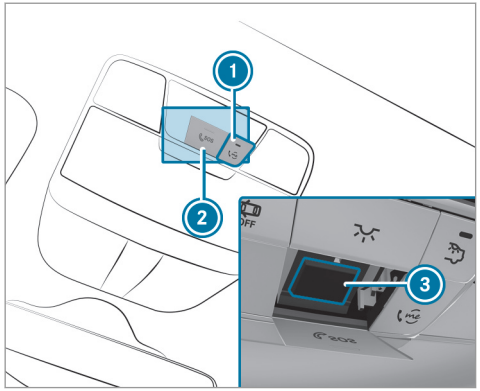

1 me button for service, concierge or information calls
2 SOS button cover
3 SOS button

▶ **To make a Mercedes me call:** press button 1.

▶ **To make an emergency call:** press SOS button cover 2 briefly to open.

▶ Press and hold SOS button 3 for at least one second.

If a Mercedes me call is active, an emergency call can still be triggered. This has priority over all other active calls.

Information about the Mercedes me call using the me button

A call to the Mercedes-Benz Customer Center has been initiated via the me button in the overhead control panel or the multimedia system.

Using the voice dialog system you access the desired service:

- Concierge Service (if the service is activated)
- Accident and breakdown management (→ page 358)
- Mercedes-Benz Customer Center for general information about the vehicle

You can find information on the following topics:

- Activation of Mercedes me connect
- Operating the vehicle
- Nearest authorized Mercedes-Benz Center
- Other products and services from Mercedes-Benz

Data is transferred during the connection to the Mercedes-Benz Customer Center (→ page 357).

Calling the Mercedes-Benz Customer Center using the multimedia system

Requirements:

- You have access to a GSM network.
- The contract partner's GSM network coverage is available in the respective region.
- The ignition is switched on so that vehicle data can be transferred automatically.

Multimedia system:

Phone ▸▸ Contacts

▶ Call Mercedes me connect.
The call is made.

After confirmation, the multimedia system sends the required vehicle data. The data transfer is shown in the media display.

Then, you can select a service and be connected to a specialist at the Mercedes-Benz Customer Center.

Arranging a service appointment via a Mercedes me call

If you have activated the maintenance management service, relevant vehicle data is transferred automatically to the Mercedes-Benz Customer Center. You will then receive individual recommendations regarding the maintenance of your vehicle.

Regardless of whether you have consented to the maintenance management service, the multimedia system reminds you after a certain amount of time that a service is due. A prompt appears asking if you would like to make an appointment.

▶ **To arrange a service appointment:** select Call.
After your agreement the vehicle data is sent and a Mercedes-Benz Customer Center employee deals with your appointment. The information is then sent to your desired service outlet.

This will contact you to confirm the appointment and if necessary consult about the details.

ⓘ If you select Later after the service message appears, the message is hidden and reappears at a later time.

Giving consent to data transfer during a Mercedes me call

Requirements:

- A service call is active using the multimedia system or the overhead control panel .

If the breakdown and Mercedes me connect Concierge services are not activated on Mercedes me, the Do you consent to the transfer of your vehicle data and the vehicle's position to the Mercedes-Benz Customer Center in order to improve the processing of your request? message appears.

▶ Select Yes.
The relevant vehicle data is sent automatically.

Transferred data during a Mercedes me call

The data transferred during a Mercedes me call depends on which service is selected in the voice control system and whether Mercedes me connect services are activated.

If no Mercedes me connect services are activated and the data protection prompt has been confirmed the following data is transmitted:

- Vehicle identification number
- Mercedes me customer identification number
- Reason for the initiation of the call
- Language set in the multimedia system
- Confirmation of the data protection prompt

If a call is made for a service appointment via the service reminder, the following data may be transmitted:

- Current mileage and maintenance data
  Transfer is possible assuming the required data transfer technology is supported by the mobile service operator and the quality of the mobile connection is sufficient.

If Accident and Breakdown Management is called via the voice control system and no service has been activated, but the data protection query has been confirmed, the following data can also be called up from the vehicle by the Mercedes-Benz Customer Center:

- Current vehicle location

ⓘ At the time of going to press, this function is technically not yet available but can be supported in the future.

If the data protection prompt has been rejected the following data is transmitted:

- Reason for the initiation of the call
- Rejection of the data protection prompt

Mercedes me connect

Notes on Mercedes me connect

Mercedes me connect provides the following services:

- Accident and breakdown management (me button)
- Concierge Service (when the service is activated), appointment requests or similar (me button)
- Mercedes-Benz emergency call system (automatic emergency call and SOS button)

The Mercedes-Benz Customer Center and the Mercedes-Benz emergency call center are available for you around the clock.

The me button and the SOS button can be found on the vehicle's overhead control panel (→ page 355).

You can also call the Mercedes-Benz Customer Center using the multimedia system (→ page 356).

Please note that Mercedes me connect is a Mercedes-Benz service. In emergencies, always call the national emergency services first using the standard national emergency service phone numbers. In emergencies, you can also use the Mercedes-Benz emergency call system (→ page 359).

Observe the conditions of use for Mercedes me connect and other services. These can be obtained in the Mercedes me portal: https://me.secure.mercedes-benz.com

Information on Mercedes me connect accident and breakdown management

The accident and breakdown management can include the following functions:

- Supplement to the Mercedes-Benz emergency call system (→ page 359)

  If necessary, the contact person at the Mercedes-Benz emergency call center forwards the call to Mercedes me connect breakdown and accident management. Forwarding the call is however not possible in all countries.
- Breakdown assistance by a mechanic on location and/or the towing away of the vehicle to the nearest authorized Mercedes-Benz Center

  You may be charged for these services.

More information about Mercedes me connect services can be obtained in the Mercedes me portal: https://me.secure.mercedes-benz.com

Data transferred during Mercedes me connect call services

The data transferred during a Mercedes me connect call depends on the reason the call was initiated, which service is selected in the voice control system and which Mercedes me connect services are activated.

Which data is transferred for the services can be taken from the currently valid terms of use. These can be obtained in the Mercedes me portal: https://me.secure.mercedes-benz.com

Mercedes-Benz emergency call system

Information on the Mercedes-Benz emergency call system

Your vehicle is equipped with the Mercedes-Benz emergency call system ("eCall"). This feature can help save lives in the event of an accident. eCall in no way replaces assistance provided from dialing 911.

The Mercedes-Benz emergency call system is available for at least ten years starting from the manufacturing date.

Mercedes-Benz eCall only functions in areas where mobile phone coverage is available from the wireless service providers. Insufficient network coverage from the wireless service providers may result in an emergency call not being transmitted.

eCall is a standard feature in your Mercedes-Benz vehicle. In order to function as intended, the system relies on the transmission of data detailed in the "Mercedes-Benz emergency call system data transmission" section that follows (→ page 361).

To disable eCall, a customer must visit an authorized Mercedes-Benz Service department to deactivate the vehicle's communication module.

Deactivation of this module prevents the activation of any and all Mercedes me connect services. After the deactivation of eCall, automatic emergency call and manual emergency call will not be available.

The ignition must be switched on before an automatic emergency call can be made.

ⓘ eCall is activated at the factory.

ⓘ eCall can be deactivated by an authorized Mercedes-Benz dealer. Please note that in the event ownership of the vehicle is transferred to another owner in its deactivated state, eCall will remain deactivated unless the new owner visits an authorized Mercedes-Benz dealership to reactivate the system.

Overview of the Mercedes-Benz emergency call system

eCall can help to reduce the time between an accident and the arrival of emergency services at the site of the accident. It helps locate an accident site in places that are difficult to access. However, even if a vehicle is equipped with eCall, this does not mean the system is ON. As such, eCall does not replace dialing 911 in the event of an accident.

The emergency call can be made automatically (→ page 360) or manually (→ page 360). Only make emergency calls if you or others are in need of rescue.

Only make emergency calls if you or others are in need of rescue. Do not make an emergency

call in the event of a breakdown or a similar situation.

Displays in the media display:
SOS READY: eCall available

SOS NOT READY: the ignition is not on or eCall is not available.

During an active emergency call, SOS appears in the display.

You can find more information on the regional availability of eCall at: https://www.mercedes-benz-mobile.com/extra/ecall/

ⓘ If there is a malfunction in the emergency call system (e.g. a malfunction with the speaker, microphone, airbag, SOS button), a corresponding message appears in the multifunction display of the instrument cluster.

Triggering an automatic emergency call
Requirements

- The ignition is switched on.
- The starter battery is sufficiently charged.

If restraint systems such as airbags or Emergency Tensioning Devices have been activated after an accident, the Mercedes-Benz emergency call system may automatically initiate an emergency call.

The emergency call has been made:

- A voice connection is made to the Mercedes-Benz emergency call center.
- A message with accident data is transmitted to the Mercedes-Benz emergency call center.

  The Mercedes-Benz emergency call center can transmit the vehicle position data to one of the emergency call centers.

The SOS button in the overhead control panel flashes until the emergency call is finished.

It is not possible to immediately end an automatic emergency call.

If no connection can be made to the emergency services either, a corresponding message appears in the media display.

▶ Dial the local emergency number on your mobile phone.

If an emergency call has been initiated:

- Remain in the vehicle if the road and traffic conditions permit you to do so until a voice connection is established with the emergency call center operator.
- Based on the call, the operator decides whether it is necessary to call rescue teams and/or the police to the accident site.
- If no vehicle occupant answers, an ambulance is sent to the vehicle immediately.

Triggering a manual emergency call

▶ Press and hold the SOS button in the overhead control panel for at least one second.

The emergency call has been made:

- A voice connection is made to the Mercedes-Benz emergency call center.
- A message with accident data is transmitted to the Mercedes-Benz emergency call center.

  The Mercedes-Benz emergency call center can transmit the vehicle position data to one of the emergency call centers.

- Remain in the vehicle if the road and traffic conditions permit you to do so until a voice connection is established with the emergency call center service provider.
- On the basis of the call, the service provider decides whether it is necessary to call rescue teams and/or the police to the accident site.

If no connection can be made to the emergency services either, a corresponding message appears in the media display.

▶ Dial the local emergency number on your mobile phone.

Ending an unintentional emergency call

▶ **Select** ☎ on the multifunction steering wheel. Depress button for several seconds.

Data transfer of the Mercedes-Benz emergency call system

In the event of an automatic or manual emergency call the following data is transmitted, for example:

- Vehicle's GPS position data
- GPS position data on the route (a few (hundred meters) before the incident)
- Direction of travel
- Vehicle identification number
- Vehicle drive type
- Number of people determined to be in the vehicle
- Whether Mercedes me connect is available or not
- Whether the emergency call was initiated manually or automatically
- Time of the accident
- Language setting on the multimedia system

Data transmitted is vehicle information. For any questions about the collection, use and sharing of the eCall system data, please contact MBUSA's Customer Assistance Center at 800-FORMERC.

For Canada, please contact MBC's Customer Assistance Center at 1-800-387-0100.

Customer requests for covered information should be submitted via the same channels.

For accident clarification purposes, the following measures can be taken up to an hour after the emergency call has been initiated:

- The current vehicle position can be called up.
- A voice connection to the vehicle occupants can be established

Online and Internet functions

Internet connection

Information on connecting to the Internet

⚠ **WARNING** Risk of distraction from information systems and communications equipment

If you operate information and communication equipment integrated in the vehicle when driving, you will be distracted from the traffic situation. This could also cause you to lose control of the vehicle.

▶ Only operate this equipment when the traffic situation permits.

▶ If you cannot be sure of this, stop the vehicle whilst paying attention to road and traffic conditions and operate the equipment with the vehicle stationary.

You must observe the legal requirements for the country in which you are currently driving when operating the multimedia system.

⚠ **WARNING** Risk of an accident from operating mobile communication equipment while the vehicle is in motion

Mobile communications devices distract the driver from the traffic situation. This could also cause the driver to lose control of the vehicle.

▶ As the driver, only operate mobile communications devices when the vehicle is stationary.

▶ As a vehicle occupant, only use mobile communications devices in the areas intended for this purpose, e.g. in the rear passenger compartment.

You must observe the legal requirements for the country in which you are currently driving when operating mobile communication equipment in the vehicle.
The Internet functions can only be used to a limited degree whilst driving.

Function of the communication module
On vehicles with a built-in communication module, the Internet connection is established via an integrated SIM card.

To use Internet access via the communication module the following conditions must be met:

- The vehicle is equipped with a permanently installed communication module.
- Mercedes me connect is active and ready for operation.
- Mercedes me connect is activated for Internet access.
- Country dependent: data volume via Mercedes me connect is available.

If the data volume limit is reached, the availability of Mercedes me connect services is limited.

The data volume must be purchased via Mercedes me connect.

ⓘ Contact an authorized Mercedes-Benz Center to find out whether it is possible to purchase data volume in your country.

Establishing an Internet connection
Multimedia system:
→ Connect

▶ For example, select Browser.

ⓘ The multimedia system usually establishes the Internet connection automatically. If the multimedia system is not connected to the Internet, the Internet connection is established when an Internet application is used.

ⓘ The availability of web browsers is country-dependent.

Connection status

Connection status overview

① Display of the communication module reception field strength

② Display of existing connection

Displaying the connection status

Multimedia system:

→ System ▸▸ Connectivity

▶ Select Internet Status.

ⓘ In the case of a connection via the communication module the following status information is shown:

- Type of network
- Status online/offline

Mercedes-Benz Apps

Calling up Mercedes-Benz Apps

Requirements:

- The registration for the use of Mercedes-Benz Apps has been completed.
- The general terms and conditions have been confirmed.

Multimedia system:

→ Connect ▸▸ Mercedes-Benz Apps

▶ Select an app.

ⓘ The available features are country-dependent.
License fees may be applicable.

Operating Mercedes-Benz Apps using voice control

Requirements:

- The registration for the use of Mercedes-Benz Apps has been completed.
- The general terms and conditions have been confirmed.

The symbol indicates that a Mercedes-Benz app can be used via voice control.

▶ Select a Mercedes-Benz app.
The app menu is displayed.

▶ **To use voice control:** select Language.

▶ Say the question or command.

ⓘ Voice control is not available in all countries and languages.

Web browser

Calling up a web page

WARNING Risk of distraction from information systems and communications equipment

If you operate information and communication equipment integrated in the vehicle when driving, you will be distracted from the traffic situation. This could also cause you to lose control of the vehicle.

- ▶ Only operate this equipment when the traffic situation permits.
- ▶ If you cannot be sure of this, stop the vehicle whilst paying attention to road and traffic conditions and operate the equipment with the vehicle stationary.

You must observe the legal requirements for the country in which you are currently driving when operating the multimedia system.

Multimedia system:

Connect ▸▸ Browser ▸▸ Enter URL

- ▶ Enter a web address.
- ⓘ The function is country-dependent.
- ▶ **To finish the entry and call up the website:** select ok .

Showing/hiding the web browser menu

If you call up a website by selecting a link, for example, the web browser menu is hidden.

- ▶ **To show/hide:** press the ⮌ button.
- ⓘ The web browser supports video playback.
- ⓘ No websites or videos are displayed while the vehicle is in motion.

Web browser overview

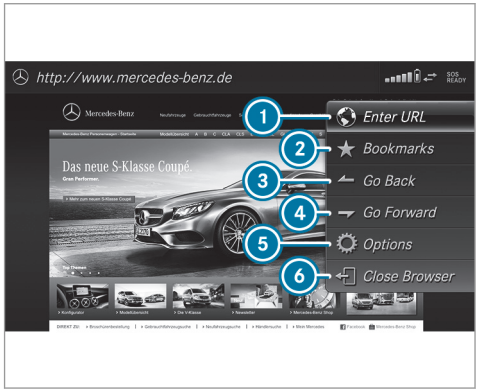

1. URL entry
2. Bookmarks
3. Web page, back
4. Web page, forwards
5. Options
6. Closes the browser

Calling up web browser options
Multimedia system:
Connect ▸▸ Browser
▸▸ Options
The following functions are available:
- Refresh Page/Cancel
- Zoom
- Browser Settings
- Delete Browser Data

▶ Select an option.
▶ Make the desired changes to the settings.

Calling up the web browser settings
Multimedia system:
Connect ▸▸ Browser
▸▸ Options ▸▸ Browser Settings
The following functions are available:
- Block Pop-Ups
- Activate Javascript
- Allow Cookies

▶ Activate ☑ or deactivate ☐ the function.

Deleting browser data
Multimedia system:
Connect ▸▸ Browser
▸▸ Options ▸▸ Delete Browser Data
The following options are available:
- All
- Cache
- Cookies
- Entered URLs
- Form Data

▶ Select an option.
▶ Select Yes.

Managing bookmarks
Multimedia system:
Connect ▸▸ Browser
▸▸ Bookmarks

Selecting a bookmark
▶ Select an entry.

Creating a bookmark
▶ Select Add New Bookmark.
▶ Enter a URL and a name.
▶ Select ok.

Editing a bookmark
▶ Highlight a bookmark.
▶ Select ☰.
▶ Select Edit.
▶ Enter a URL and a name.
▶ Select ok.

Deleting a bookmark
▶ Highlight a bookmark.
▶ Select ☰.
▶ Select Delete.
▶ Select Yes.

Closing the browser
Multimedia system:
Connect ▸▸ Browser
▶ Select Close Browser.

TuneIn radio

Calling up Internet Radio

Requirements:

- The Internet Radio service is activated.
- The data volume is available.

  Depending on the country, data volume may need to be purchased.
- A fast Internet connection for data transmission free of interference.

  The services are country-dependent.

  For more information, consult an authorized Mercedes-Benz Center.

Multimedia system:

→ Radio ▸▸ Radio Source

▶ Select TuneIn Radio.
The Internet Radio display appears. The last station set starts playing.

ⓘ The connection quality depends on the local mobile phone reception.

Internet Radio overview

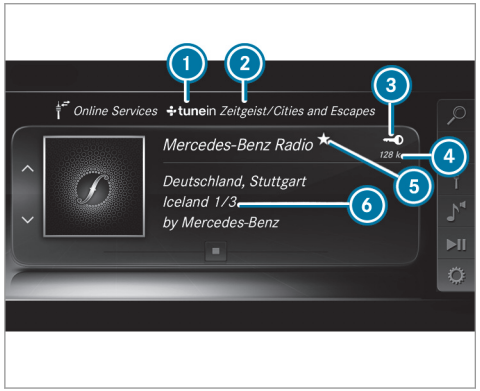

1. Internet Radio provider
2. Selected category
3. Display (if connected to private user account)
4. Data transfer rate
5. Current station is stored as a favorite
6. Additional information on the current station

Selecting and connecting Internet Radio stations

Multimedia system:

→ Radio ▸▸ Radio Source
▸▸ TuneIn Radio ▸▸ Search

▶ Select a category.

▶ Select a station.
The connection is established automatically.

or

▶ Select Enter Address or POI.

▶ Enter a station name using the entry field.

ⓘ A relatively large volume of data can be transmitted when using Internet Radio.

Saving/deleting an Internet Radio station as a favorite

Multimedia system:

→ Radio ▸▸ Radio Source
▸▸ TuneIn Radio

▶ Select a station.

▶ Press and hold the central control element until an audible signal sounds.
The ★ symbol appears by the station name.

▶ Select ★ Favorites.
The list of saved favorite stations appears.

or

▶ Create an account for the online provider (TuneIn radio) and then log in on the multimedia system.
Your favorites are imported to the multimedia system.

Deleting favorites

▶ Select ★ Favorites.

▶ Select a station.

▶ Press and hold the central control element until an audible signal sounds.
The ★ symbol by the station name disappears.

Setting Internet Radio options

Multimedia system:

→ Radio ▸▸ Radio Source ▸▸ TuneIn Radio ▸▸ ⚙ Options

The following options are available:

- Select Stream: select the stream quality.
- Login to TuneIn Account: log in to your TuneIn user account.
- Log Out of Account: log out of your TuneIn user account.

▶ Select an option.

Media

Audio mode

Information on the audio mode

⚠ **WARNING** Risk of distraction when handling data storage media

If you handle a data storage medium while driving, your attention is diverted from the traffic conditions. This could also cause you to lose control of the vehicle.

▶ Only handle a data storage medium when the vehicle is stationary.

Permissible file systems:

- FAT32
- exFAT
- NTFS

Permissible data storage medium:

- SD card
- USB storage device
- iPod®/iPhone®
- MTP devices
- Bluetooth® audio equipment

ⓘ Observe the following notes:

- The multimedia system supports a total of up to 50,000 files.
- Data storage media up to 2 TB are supported (32-bit address space).

Supported formats:

- MP3
- WMA
- AAC
- WAV
- FLAC
- ALAC

ⓘ Observe the following notes:

- Due to the large variety of available music files regarding encoders, sampling rates and data rates, playback cannot always be guaranteed.
- Due to the wide range of USB devices available on the market, playback cannot be guaranteed for all USB devices.
- Copy-protected music files or DRM encrypted files cannot be played back.
- MP3 players must support Media Transfer Protocol (MTP).

Manufactured under license from Dolby Laboratories. Dolby, Dolby Audio and the double-D symbol are trademarks of Dolby Laboratories.

Gracenote, the Gracenote logo and logotype, "Powered by Gracenote", MusicID and Playlist Plus are either registered trademarks or trademarks of Gracenote, Inc. in the United States and/or other countries.

Made for iPhone | iPod

"Made for iPod", and "Made for iPhone," mean that an electronic accessory has been designed to connect specifically to iPod, or iPhone, respectively, and has been certified by the developer to meet Apple performance standards. Apple is not responsible for the operation of this device or its compliance with safety and regulatory standards. Please note that the use of this accessory with iPod, or iPhone may affect wireless performance.

For the USA: iPhone®, iPod®, iPod classic®, iPod nano®, and iPod touch® are trademarks of Apple Inc., registered in the U.S. and other countries. Lightning™ is a trademark of Apple Inc.

For Canada: iPhone, iPod, iPod classic, iPod nano, and iPod touch are trademarks of Apple Inc., registered in the U.S. and other countries. Lightning is a trademark of Apple Inc.

Notes on copyright

Audio files that you create or reproduce yourself for playback are generally subject to copyright protection. In many countries, reproductions, even for private use, are not permitted without the prior consent of the copyright holder. Make sure that you know about the applicable copyright regulations and that you comply with these.

Activating media mode

Multimedia system:

→ Media ▸▸ Media Sources

▶ Select a media source.
Playable music files are played back.

Inserting/removing an SD card

⚠ **DANGER** Risk of fatal injury from swallowing SD cards

SD cards are small parts.

They could be swallowed and lead to choking.

▶ Keep SD cards out of the reach of children.

▶ Seek medical attention immediately if an SD card has been swallowed.

! **NOTE** Damage due to high temperatures

High temperatures may damage the SD card.

▶ Remove the SD card after use and take it out of the vehicle.

Multimedia system:

→ Media ▸▸ Media Sources ▸▸ Mem. Card

Inserting

The multimedia connection unit is located in the stowage compartment under the armrest.

▶ Insert the SD memory card into the SD card slot until it engages. The side with the contacts must face downwards.
Playable music files are played back.

Removing

▶ Press the SD card.

▶ Remove the SD card.

Overview of the audio mode

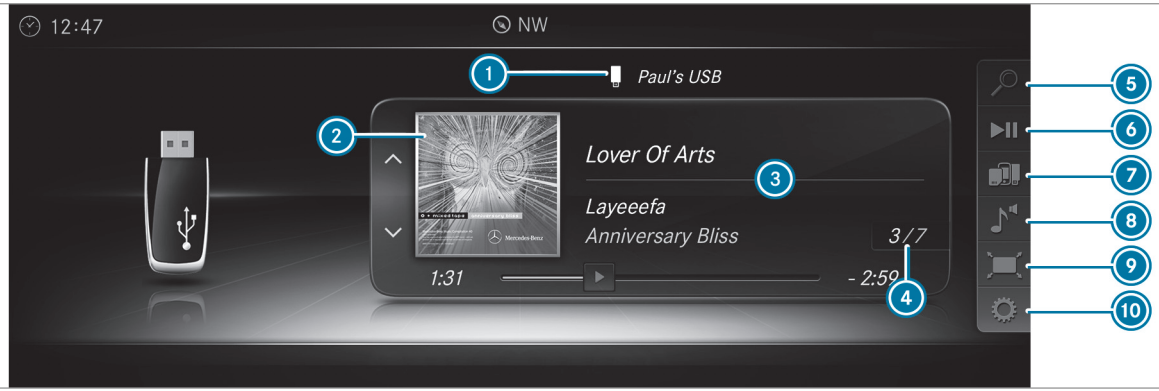

1. Active data storage medium
2. Album cover
3. Track, artist, album
4. Track number and number of tracks in the track list
5. Search
6. Playback Control
7. Media Sources
8. Sound
9. Full Screen (for video playback)
10. Options

Connecting USB devices

NOTE Damage caused by high temperatures

High temperatures can damage USB devices.

▶ Remove the USB device after use and take it out of the vehicle.

The multimedia connection unit is found in the stowage compartment under the armrest and has two USB ports.

Depending on the vehicle's equipment, additional USB ports can be found in the stowage compartment of the center console and in the rear passenger compartment.

▶ Connect the USB device to the USB port. Playable music files are played back only if the corresponding media display is activated.

ⓘ Use the USB port identified by [ ] to use Apple CarPlay™ and Android Auto.

ⓘ Depending on the vehicle equipment there is an additional USB port in the rear passenger compartment. Ports that are labeled with a battery symbol can only be used to charge USB devices.

Selecting a track in the media playback
Multimedia system:
→ Media

Selecting a track by skipping to a track

▶ **To skip backwards or forwards to a track:** navigate up or down.

Selecting a track using the current track list

▶ Select [ ].

▶ Select Current Track List.

▶ Select a track.

Selecting playback options
Multimedia system:
→ Media ▸▸ [ ] Options

Playing back similar tracks

▶ Select Play Similar Tracks.
A track list with similar tracks is created and played back.

Playback mode

▶ Select Random Mode - Current Playlist.
The current track list is played in random order.

▶ Select Random Mode - Current Medium.
All tracks on the active data storage medium are played in random order.

▶ Select Normal Track Sequence.
The current track list is played in the order it appears on the data storage medium.

Controlling media playback
Multimedia system:
→ Media ▸▸ [▶II] Playback Control

A bar with playback controls is shown.

▶ **To pause playback:** select and confirm [▶II] with the central control element.
The [II] symbol is displayed.

▶ **To resume playback:** select and confirm [▶II] again with the central control element.
The [▶] symbol is displayed.

To fast forward/rewind

▶ Move [II] on the timeline.

To hide the playback controls

▶ Press the [⮌] button.

Video mode

Switching to video mode
Multimedia system:
→ Media ▸▸ [ ] Media Sources

▶ Select a data storage medium.

▶ Search for and select video files or playlists with video files.
Playable video files are played back.

The multimedia system supports the following formats:

- MPEG
- AVI, DivX, MKV
- MP4, M4V
- WMV

ⓘ If the vehicle is traveling faster than 3 mph (5 km/h) the video image is hidden from the driver. If available, the channel and program information is continuously displayed.
Due to the large variety of available video files regarding encoders, sampling rates and data transfer rates, playback cannot be guaranteed.
Videos up to FullHD (1920x1080) are supported.
Copy-protected video files or DRM (Digital Rights Management) encrypted files cannot be played back.

Overview of video mode

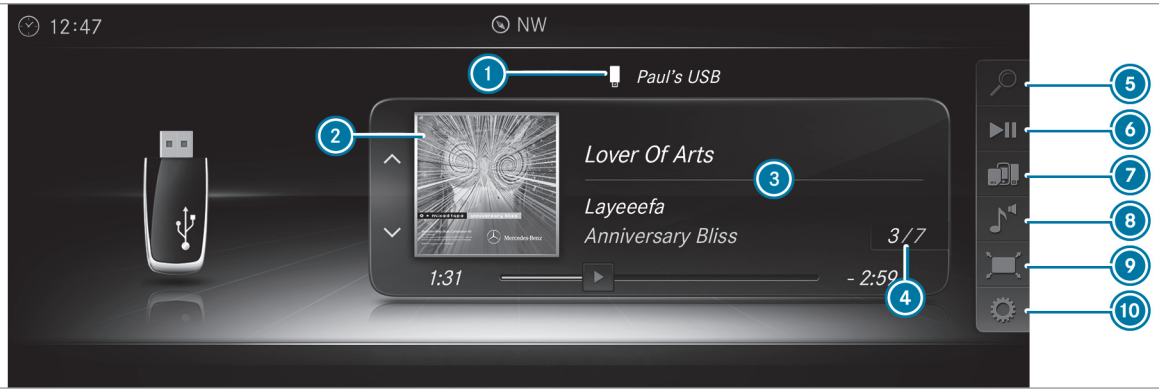

1. Active data storage medium
2. Album cover
3. Track, artist, album
4. Track number and number of tracks in the track list
5. Search
6. Playback Control
7. Media Sources
8. Sound
9. Full Screen (for video playback)
10. Options

Activating/deactivating full-screen mode

Multimedia system:

→ Media ▸▸ Media Sources

▶ Select a data storage medium.
Playable video files are played back.

▶ **To activate full-screen mode:** select Full Screen.

▶ **To deactivate full-screen mode:** press the touchpad.

Changing video settings
Multimedia system:
Media ▸▸ Options ▸▸ Picture Format

The following picture formats are available:

- Automatic
- 16:9
- 4:3
- Zoom

▶ Select a picture format.

Adjusting the brightness manually
If the Automatic picture format is switched off, you can adjust the brightness yourself.

▶ Select Brightness.
▶ Adjust the brightness.

Media search

Starting the media search
Multimedia system:
Media ▸▸ Search

Depending on the connected media sources and files, the following categories are listed:

- Current Track List
- Keyword Search
- Playlists
- Artists
- Albums
- Tracks
- Folders
- Music Genres
- Year
- Composers
- Videos
- Podcasts (Apple® devices)
- Audiobooks (Apple® devices)

▶ Select a category.

ⓘ The categories are available as soon as the entire media content has been read in and analyzed.

Media Interface

Information about the Media Interface
Media Interface is a universal interface for the connection of mobile audio equipment. The multimedia system has two USB ports. The USB ports are located in the stowage compartment under the armrest.

Supported devices

The Media Interface allows you to connect the following data storage media:

- iPod®
- iPhone®
- MP3 player
- USB devices

For details and a list of supported devices, visit our website at http://www.mercedes-benz.com/connect. Follow the instructions in the "Media Interface" section.

Switching to Media Interface

Multimedia system:

→ Media ▸▸ Media Sources

- Connect a data storage medium to the USB port (→ page 370).
- Select a media device.
  Playable music files are played back.

Overview of Media Interface

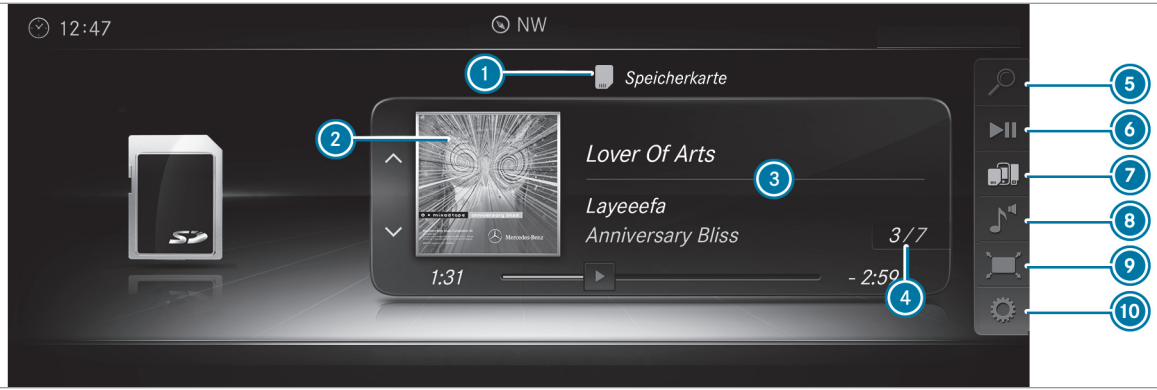

1. Active data storage medium
2. Album cover
3. Artist, track and album
4. Track number and number of tracks in the track list
5. Search
6. Playback Control
7. Media Sources
8. Sound
9. Full Screen (video playback only)
10. Options

Bluetooth® audio

Information about Bluetooth® audio

Before using your Bluetooth® audio equipment with the multimedia system for the first time, you will need to authorize it (→ page 377).

Bluetooth® audio overview

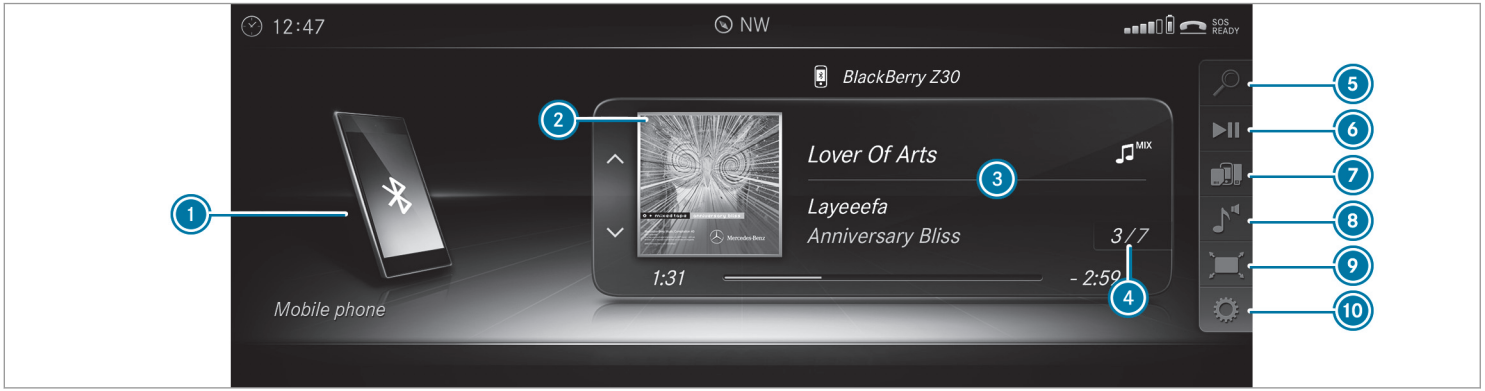

1. Active data storage medium
2. Album cover
3. Track, artist, album
4. Track number and number of tracks in the track list
5. Search
6. Playback Control
7. Media Sources
8. Sound
9. Full Screen (video playback only)
10. Options

Searching for and authorizing a Bluetooth® audio device

Requirements:

- Bluetooth® is activated on the multimedia system and audio equipment (→ page 303).
- The audio equipment supports the Bluetooth® audio profiles A2DP and AVRCP.
- The audio equipment is "visible" for other devices.

Multimedia system:

→ Media ▸▸ Media Sources ▸▸ Bluetooth Audio

Authorizing a new Bluetooth® audio device

- ▶ Select .
- ▶ Select Add New Bluetooth Audio Device.
- ▶ Select Start Search on System.
  Detected audio equipment is displayed in the device list.
- ▶ Select a Bluetooth® audio device.
  Authorization starts. A code is displayed on the multimedia system and on the mobile phone.
- ▶ If the codes are identical, confirm on the audio equipment.
  The audio equipment is connected and playback starts.

Selecting previously authorized Bluetooth® audio equipment

- ▶ Select .
- ▶ Select a Bluetooth® audio device.

Establishing a connection from the Bluetooth® audio equipment

The Bluetooth® device name of the multimedia system is MB BLUETOOTH XXXXX.

- ▶ Select Search from Device.
- ▶ Start the authorization on the audio equipment (see manufacturer's operating instructions).
  A code is displayed on the multimedia system and on the audio device.
- ▶ Confirm on both devices if the codes are identical.
  The audio equipment is connected and playback starts.

With some audio equipment, playback must be initially started on the device itself so that the multimedia system can play the audio files.

ⓘ Device-specific information on authorizing and connecting Bluetooth®-capable mobile phones can be obtained at https://www.mercedes-benz-mobile.com/ or from an authorized Mercedes-Benz Center.

Activating Bluetooth® audio

Multimedia system:

→ Media ▸▸ Media Sources

- ▶ Select Bluetooth Audio.
  The multimedia system activates the connected Bluetooth® audio equipment.

Selecting the media player on the Bluetooth® audio device

Multimedia system:

→ Media ▸▸

- ▶ Select the Bluetooth Audio Players category.
  If multiple media players are present on the Bluetooth® audio equipment a list appears.
- ▶ Select a media player.
  Playback starts.

ⓘ The function is not supported by every mobile phone.

Searching for a music track on the Bluetooth® audio device

Multimedia system:

→ Media ▸▸ Media Sources ▸▸ Bluetooth Audio

▶ Select .

▶ Select a category.
A track list appears.

▶ Select a track.

ⓘ The function is only available when the mobile phone and the media player selected on the mobile phone support this function.

Switching Bluetooth® audio equipment via NFC

Requirements:

- Observe the notes on using NFC (→ page 344).
- The Bluetooth® audio overview is displayed (→ page 377).

▶ Lightly press the NFC area on the mobile phone (see the manufacturer's operating instructions).
If the mobile phone has already been authorized on the multimedia system as Bluetooth® audio equipment, it is now connected.
If the mobile phone is authorized on the multimedia system as Bluetooth® audio equipment for the first time, it is connected after confirming the instructions for the mobile phone (see the manufacturer's operating instructions).

Disconnecting Bluetooth® audio equipment

Multimedia system:

→ Phone ▸▸ Media Sources

▶ Select the symbol in the line of the mobile phone.
The disconnection of the mobile phone takes place without a confirmation prompt. The mobile phone remains authorized in the system.

Starting cinema mode

Multimedia system:

→ Media ▸▸ Media Sources ▸▸ Loudspeaker Audio Source

In cinema mode, a media source connected to the Rear Seat Entertainment System is simultaneously played in the multimedia system.

▶ Select the Rear Seat Entertainment System device.
The media source is also played on the multimedia system.

Radio

Switching on the radio

Multimedia system:

→ Radio

▶ Alternatively: press the RADIO button.
The radio display appears. You will hear the last station played on the last frequency band selected.

Radio overview

1. Active frequency band
2. Station name or set frequency
3. Artist, title, album and radio text
4. Station list
5. Presets
6. Radio Source
7. Sound
8. Options

Switching the HD Radio function on/off

Multimedia system:

→ Radio ▸▸ [⚙] Options ▸▸ HD Radio

▶ Switch the function on ☑ or off ☐.

ⓘ HD Radio Technology manufactured under license from iBiquity Digital Corporation. U.S. and Foreign Patents. HD Radio™ and the HD, HD Radio and "Arc" logos are proprietary trademarks of iBiquity Digital Corp.

Setting the waveband

Multimedia system:

→ Radio ▸▸ [i] Radio Source

HD Radio FM HD Radio AM and SiriusXM Radio can be selected.

▶ Select a frequency band.

Selecting a radio station

Multimedia system:

→ Radio

▶ Navigate up or down.

Calling up the radio station list

Multimedia system:

→ Radio ▸▸ [🔍]

▶ Select a station.

Searching for radio stations using station names or direct frequency entry

Multimedia system:

→ Radio ▸▸ [🔍]

▶ Enter a station name or frequency.

▶ Select [OK].
The search results are displayed.

▶ Select a station.

Storing radio stations

Multimedia system:

→ Radio ▸▸ [★] Presets

▶ Select Store Current Station in the Presets.

Editing radio station presets

Multimedia system:

→ Radio ▸▸ [★] Presets

Moving stations:

▶ Highlight a preset entry and navigate to the left.

- Select Move Highlighted Station.
- Select a memory preset.

Deleting stations:

- Highlight a preset entry and navigate to the left.
- Select Delete Highlighted Station.
- Select Yes.

Tagging music tracks

Multimedia system:

→ Radio

If radio stations provide the relevant information, this function allows you to transfer information on the music track currently playing to an Apple® device. You can then purchase the audio file from the iTunes Store®.

- Select ♫→ Tag This Song.
  The track information is saved.

Activating/deactivating radio text

Multimedia system:

→ Radio ▸▸ ⚙ Options
▸▸ Display Radio Text Information

- Activate ☑ or deactivate ☐ the function.

Satellite radio

Information on the satellite radio

SIRIUS XM® satellite radio offers more than 175 digital-quality radio channels providing 100% commercial-free music, sports, news and entertainment, for example. SIRIUS XM satellite radio employs a fleet of high-performance satellites to broadcast around the clock throughout the USA and Canada. The satellite radio program is available for a monthly fee. Information about this can be obtained from a Sirius XM® Service Center and at http://www.siriusxm.com (USA) or http://www.siriusxm.ca (Canada).

ⓘ Sirius, XM and all related marks and logos are trademarks of Sirius XM Radio Inc. and its subsidiaries. All other marks, channel names and logos are the property of their respective owners. All rights reserved.

Satellite radio restrictions

Satellite radio mode may be temporarily unavailable or interrupted for a variety of reasons. These include environmental or topographical conditions beyond the control of Mercedes-Benz USA, LLC. Thus, operation at certain locations may not be possible.

Registering satellite radio

Requirements:

- Satellite radio equipment
- Registration with a satellite radio provider
- If registration is not included when purchasing the system, your credit card details will be required to activate your account

Multimedia system:

→ Radio ▸▸ [ ] Radio Source
▸▸ SiriusXM Radio ▸▸ [ ] Options

▶ Select Service Information.
The service information screen appears showing the radio ID and the current subscription status.

▶ Establish a telephone connection.

▶ Follow the service staff's instructions.
The activation process may take up to ten minutes.

ⓘ You can also have the satellite service activated online. To do so, please visit http://www.siriusxm.com (USA) or http://www.siriusxm.ca (Canada).

Switching on satellite radio

Multimedia system:

→ Radio ▸▸ [ ] Radio Source

▶ Select SiriusXM Radio.

Overview of the satellite radio

1. Active frequency band
2. Logo or cover picture for the song (if available)
3. Category
4. Channel name
5. Artist, track and album
6. SiriusXM Radio Channels
7. Presets
8. Radio Source
9. Sound
10. Playback Control
11. Options

Selecting a satellite radio category

Multimedia system:

→ Radio ▸▸ Radio Source ▸▸ SiriusXM Radio ▸▸ SiriusXM Radio Channels ▸▸ Category

▶ Select a category.

Selecting a satellite radio channel
Multimedia system:
→ Radio ▸▸ Radio Source
▸▸ SiriusXM Radio

▶ Navigate up or down.

Saving or deleting a satellite radio channel
Multimedia system:
→ Radio ▸▸ Radio Source
▸▸ SiriusXM Radio ▸▸ Presets

▶ Select Store Current Station in the Presets.

Moving a channel

▶ Select Options.
▶ Select Move Highlighted Station.
▶ Select a memory preset.

Deleting a channel

▶ Select Delete Highlighted Station.
▶ Select a memory preset.

Displaying EPG information for the current channel
Multimedia system:
→ Radio ▸▸ Radio Source
▸▸ SiriusXM Radio ▸▸ Options

▶ Select EPG Information about Current Channel.

Setting parental control for radio
Multimedia system:
→ Radio ▸▸ Radio Source
▸▸ SiriusXM Radio ▸▸ Options
▸▸ Parental Control

▶ Activate the function ☑.
▶ Determine a four-digit character sequence and select ok.
All channels with adult content are locked.

Unlocking a channel

▶ Enter the four-digit character sequence and select ok.
All channels with adult content are unlocked.

Music and sport alerts function
This function enables you to program an alert for your favorite artists, tracks or sporting events. Music alerts can be saved whilst a track is being played and sport alerts can be saved during a live game. You can also specify sport alerts via the menu option. The system then continuously searches through all the channels. If a match is found with a stored alert, you will be informed.

Setting music and sport alerts
Multimedia system:
→ Radio ▸▸ Radio Source
▸▸ SiriusXM Radio ▸▸ Options
▸▸ Alert for Artist, Song & Sporting Event

Setting a music alert

▶ Select Add New Alert.

or

▶ Select Manage Artist & Song Alerts.
▶ Select Options.
The following options are available:
- Mark This Entry
- Unmark This Entry

- Mark All Entries
- Unmark All Entries
- Delete This Entry
- Delete All Entries

▶ Select an option.

▶ Activate Artist & Song Alerts ☑.
The alert is set for the current artist or track. If a match is found, a prompt appears asking whether you wish to change to the station.

Setting a sport alert

▶ Select Add New Alert.

or

▶ Select Manage Sports Alerts.
▶ Select Select New Alerts.

or

▶ Select Edit Alerts.
▶ Select a team from a league.

▶ Activate Sports Alerts ☑.

Information on Smart Favorites and Tune Start

Stations in the station presets can be added as Smart Favorites. Smart Favorites stations are automatically saved to temporary storage in the background. If you change to a Smart Favorites station, you can replay, pause or actively skip forward or back to broadcasts which you have missed. If Tune Start is activated and you change to another Smart Favorites station, the music track currently playing on the station is automatically restarted from the beginning of the track.

Adding a channel to Smart Favorites

Multimedia system:

Radio ▸▸ Radio Source ▸▸ SiriusXM Radio

▶ Select the active frequency band.

▶ Highlight an entry.

▶ Select .

▶ Select Add Highlighted Channel to Smart Favorites.

Activating/deactivating TuneStart

Multimedia system:

Radio ▸▸ Options ▸▸ TuneStart

▶ Activate ☑ or deactivate ☐ the function.

Controlling playback

Multimedia system:

Radio ▸▸ Playback Control

You can pause the playback of the current station or skip forward or backward in the timeline. This leaves live mode to access the internal temporary storage.

▶ **To fast forward/rewind:** turn the controller counter-clockwise or clockwise/swipe left or right on the touchpad.

▶ **To jump to the previous/next song:** press the controller left or right/swipe left or right on the touchpad.

▶ **To pause playback:** select .

▶ **To return to live mode:** navigate to the end of the timeline.

Displaying satellite radio service information
Multimedia system:
→ Radio ▸▸ [ ] Radio Source
▸▸ SiriusXM Radio ▸▸ [ ] Options

▶ Select Service Information.

Sound

Tone settings

Information about the sound system
The sound system has a total output of 100 W and is equipped with ten speakers. It is available for all functions in the radio and media modes.

Calling up the sound menu
Multimedia system:
→ Media ▸▸ [ ] Sound

The following functions are available:

- Equalizer
- Balance and Fader
- Automatic Volume Adjustment
- Other Sound Settings

▶ Select a sound menu.

Adjusting treble, mid-range and bass settings
Multimedia system:
→ Media ▸▸ [ ] Sound ▸▸ Equalizer

▶ Select Treble, Mid Range or Bass.

▶ Change the settings.

Activating/deactivating automatic volume adjustment
Multimedia system:
→ Media ▸▸ [ ] Sound
▸▸ Automatic Volume Adjustment

Automatic volume adjustment compensates for differing volumes when changing between audio sources.

▶ Activate ☑ or deactivate ☐ the function.

Adjusting the balance/fader
Multimedia system:
→ Media ▸▸ [ ] Sound
▸▸ Balance and Fader

▶ Adjust the balance and fader.

▶ **To exit the menu:** press the [ ] button.

Burmester® surround sound system

Information about the Burmester® surround sound system
The Burmester® surround sound system has a total output of 590 W and is equipped with 13 speakers. It is available for all functions in the radio and media modes.

Calling up the sound menu in the Burmester® surround sound system
Multimedia system:
→ Media ▸▸ [ ] Sound

The following functions are available:

- Equalizer
- Balance and Fader
- Automatic Volume Adjustment
- Surround Sound
- Sound Focus
- Other Sound Settings

▶ Select a function.

Adjusting the treble, mid and bass settings on the Burmester® surround sound system
Multimedia system:
Media ▸▸ Sound ▸▸ Equalizer

▶ Select Treble, Mid Range or Bass.

▶ Set the desired values.

Activating/deactivating volume adjustment in the Burmester® surround sound system
Multimedia system:
Media ▸▸ Sound
▸▸ Automatic Volume Adjustment

Automatic volume adjustment compensates for differing volumes when changing between audio sources.

▶ Activate ☑ or deactivate ☐ the function.

Adjusting the balance/fader in the Burmester® surround sound system
Multimedia system:
Media ▸▸ Sound
▸▸ Balance and Fader

▶ Adjust the balance and fader.

▶ **To exit the menu:** press the ⮌ button.

Switching surround sound on/off in the Burmester® surround sound system
Multimedia system:
Media ▸▸ Sound
▸▸ Surround Sound

▶ Activate ☑ or deactivate ☐ the function.

Adjusting the sound focus in the Burmester® surround sound system
Multimedia system:
Media ▸▸ Sound ▸▸ Sound Focus

▶ Adjust the sound focus.

Burmester® high-end 3D surround sound system

Information on the Burmester® high-end 3D surround sound system
The Burmester® high-end 3D surround sound system has a total output of 1590 watts and is equipped with 27 speakers. It is available for all functions in the radio and media modes.

Calling up the sound menu in the Burmester® high-end 3D surround sound system
Multimedia system:
Media ▸▸ Sound

The following functions are available:

- Equalizer
- Balance and Fader
- Automatic Volume Adjustment
- VIP Seat (seat-based sound optimization)
- Sound Profiles
- Other Sound Settings

▶ Select a sound menu.

Adjusting the treble, mid-range and bass settings on the Burmester® high-end 3D surround sound system
Multimedia system:
Media ▸▸ Sound ▸▸ Equalizer

▶ Select Treble, Mid Range or Bass.

▶ Set the desired values.

Activating/deactivating volume adjustment in the Burmester® high-end 3D surround sound system

Multimedia system:

→ Media ▸▸ [♪] Sound ▸▸ Automatic Volume Adjustment

Automatic volume adjustment compensates for differing volumes when changing between audio sources.

▶ Activate ☑ or deactivate ☐ the function.

Adjusting the balance/fader in the Burmester® high-end 3D surround sound system

Multimedia system:

→ Media ▸▸ [♪] Sound ▸▸ Balance and Fader

▶ Adjust the balance and fader.

▶ **To exit the menu:** press the [↩] button.

Adjusting the seat-based sound optimization in the Burmester® high-end 3D surround sound system

Multimedia system:

→ Media ▸▸ [♪] Sound ▸▸ VIP Seat

This setting optimizes the sound playback for the selected seat position.

▶ Activate the function ☑.

▶ Select a seat position.

Selecting the sound profile in the Burmester® high-end 3D surround sound system

Multimedia system:

→ Media ▸▸ [♪] Sound ▸▸ Sound Profiles

The following profiles are available:

- Pure
- Easy Listening
- Live
- Surround
- 3D-Sound

▶ Select a sound profile.

Rear Seat Entertainment System

Operating safety

⚠ **WARNING** Risk of injury from laser radiation from the Blu-ray drive

The Blu-ray drive is a class 1 laser product. If you open the housing of the Blu-ray drive, there is a risk of exposure to invisible laser radiation.

Laser radiation can damage your retina.

▶ Do not open the housing.

▶ Always have maintenance work and repairs carried out by a qualified specialist workshop.

⚠ **WARNING** Risk of injury from unsecured items in the vehicle

If objects such as headphones/headsets or external audio/video sources are not secured in the vehicle interior, they can be flung around and hit vehicle occupants.

▶ Always stow these items or similar objects carefully so that they cannot be flung around, for example in a lockable vehicle stowage compartment.

Observe the notes on loading the vehicle.

Replacing batteries (Rear Seat Entertainment System)
Batteries are required for the remote control and the cordless headphones.

⚠ **DANGER** Serious damage to health caused by swallowing batteries

Batteries contain toxic and corrosive substances. Swallowing batteries may cause serious damage to health.

There is a risk of fatal injury.

▶ Keep batteries out of the reach of children.

▶ If batteries are swallowed, seek medical attention immediately.

ENVIRONMENTAL NOTE Environmental damage caused by improper disposal of batteries

Batteries contain pollutants. It is illegal to dispose of them with the household rubbish.

▶ Dispose of batteries in an environmentally responsible manner. Take discharged batteries to a qualified specialist workshop or to a collection point for used batteries.

Rear Seat Entertainment System overview

The Rear Seat Entertainment System includes:

- Two rear displays
- Two remote controls
- Up to two cordless headphones
- Blu-ray drive
- Ports for USB (two) and HDMI

ⓘ The function of the remote control and the cordless headphones can be impaired by other radio-based electronic devices, e.g. mobile phones.

Rear displays

Overview of the rear displays

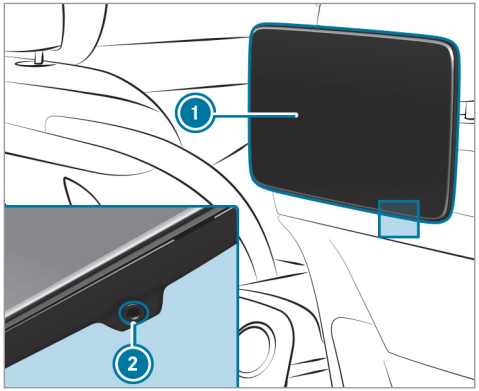

1. Display
2. Socket for corded headphones with a 3.5 mm stereo jack

ⓘ Headphones with wired remote control and stereo jack (3.5 mm) cannot be used.

The rear compartment displays are located behind the head restraints of the front seats.

Setting the angle of the rear display

- Select a rear display on the remote control (→ page 392).
- Press the CAR button.
- **To show the menu:** press the ◀ button.
- Select Entertainment settings.
- Select Display angle.
- Select Up or Down.

Remote control

Remote control overview

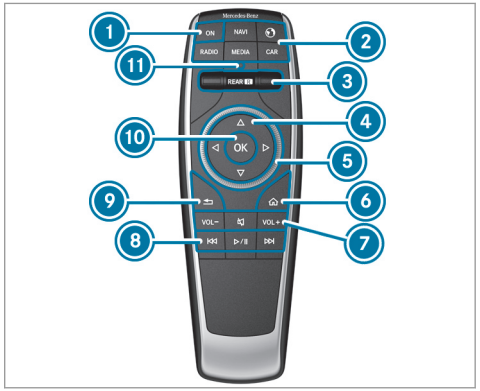

1. To switch the rear display on and off
2. Main functions button group:
   - NAVI To switch navigation on
   - To call up online and Internet functions
   - RADIO To switch on the radio

MEDIA To switch to media mode
CAR To set vehicle functions

3 To select the rear display (→ page 392)
4 To select a menu function with ▲ ▼ ◀ ▶
5 To select menu functions using the selector wheel
6 To display main functions
7 Volume and sound button group:
To reduce the volume (corded headphones)
To switch sound off/on
To increase the volume (corded headphones)
8 Media playback button group:
⏮ To skip to the beginning of a scene
⏭ To skip to the end of a scene
▶ Play
⏸ Rest
9 Back button
10 OK To confirm a menu function
11 Indicator lamp

Displays of indicator lamp 11

LED color	Meaning
Green The LED flashes once.	Entry being transmitted. The batteries are fully charged. The batteries have been inserted correctly.
Red The LED flashes once.	Entry being transmitted. The batteries are almost discharged.
Orange The LED flashes three times.	Entry not correctly transmitted.
No display	The batteries are discharged.

Switching rear displays on/off

▶ Press the start/stop button once.
▶ Press the ON button on the remote control.

or

▶ Press the ON touchkey on the rear display. The rear display is switched on or off.

The rear displays are switched off after 30 minutes at the latest in the following situations:

- The ignition is switched off
- The SmartKey is not in the marked space.

ⓘ Please note that the battery continues to discharge by switching the system on again.

Selecting the rear display with the remote control

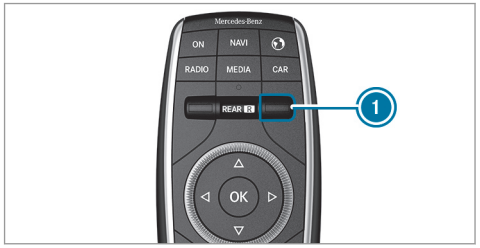

▶ Turn dial ①.
COMAND: multimedia system

L REAR: rear display, left

R REAR: rear display, right

Replacing batteries (remote control)
Requirements:

- There are two type AAA, 1.5 V batteries for the remote control.

  Observe the safety and environmental note (→ page 389).

The battery compartment is located on the reverse side.

▶ Push the catch tab downwards and take off the battery compartment cover.

▶ Remove discharged batteries from the battery compartment.

▶ Insert new batteries. Observe the polarity markings on the batteries and battery compartment.

▶ First place the battery compartment cover on the retaining lugs in the battery compartment.

▶ Allow the catch tab to engage in the battery compartment.

Headphones

Headphones overview

① Indicator lamp
② On/off switch
③ Volume control

Adjust the fit of the headphones:

- Pull both sides of the headphones outwards.

- Pull the headphone band in the direction of the arrow.

Indicator lamp ①

LED color	Meaning
Green	The batteries are fully charged. The batteries have been inserted correctly.
Red	The batteries are almost discharged.
The LED lights up.	The cordless headphones are switched on and connected to a rear display.
The LED flashes.	The cordless headphones are searching for a connection to a rear display.
The LED is dark.	The cordless headphones are switched off. The batteries are discharged.

The headphones automatically switch off if they have not received an audio signal for approximately three minutes. This preserves the batteries.

Switching headphones on/off

▶ Press ② (→ page 393).

Selecting the rear display for the headphones

▶ Move switch ① to L (left rear display) or R (right rear display).

Setting the volume for headphones

▶ Turn volume control ③ (→ page 393).

Replacing batteries (headphones)
Requirements:

- There are two type AAA, 1.5 V batteries for the cordless headphones.

  Observe the safety and environmental note (→ page 389).

ⓘ The operating duration of the headphones with a set of batteries is up to 40 hours.

The battery compartment is located on the left headphone.

- ▶ Switch the headphones off.
- ▶ Turn battery compartment cover ① counter-clockwise and remove.
- ▶ Remove discharged batteries from the battery compartment.
- ▶ Insert new batteries. Observe the polarity markings on the batteries and battery compartment.
- ▶ Replace battery compartment cover ① and turn it clockwise until it engages.
- ▶ Switch the headphones on.
  If the batteries have been inserted correctly, the indicator lamp will light up green.

Blu-ray drive overview

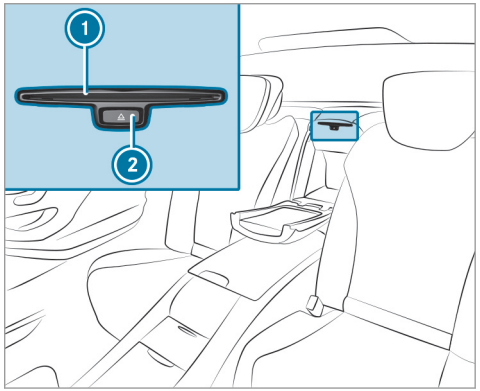

① Disc slot
② To insert/eject data storage medium

Depending on the vehicle equipment, the Blu-ray drive is located in the following positions:

- at the rear of the center console under the automatic climate control panel

- between the rear shelf and through-load ski bag

Overview of Rear Seat Entertainment System ports

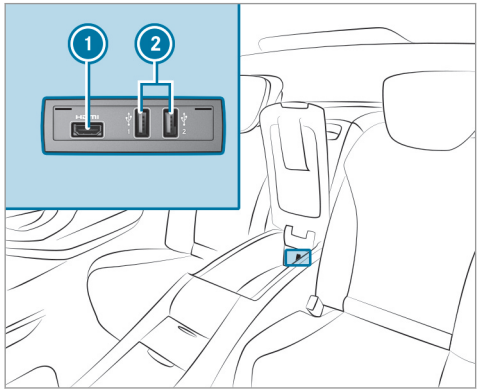

① HDMI port
② USB ports

Depending on the vehicle equipment, the ports are located in the following positions:

- in the stowage box between the rear seats or
- in the rear armrest

Rear seats

Adjusting the rear seats

Rear Seat Entertainment System:

System ▸▸ Seat

▶ Select Side Bolsters or Lumbar.

▶ Select the setting.

Memory function

▶ Save the seat adjustments with the memory function (→ page 121).

Selecting the massage program for the rear seats

Rear Seat Entertainment System:

System ▸▸ Seat

▶ Select Massage.

▶ Select a massage program.
The massage program runs for approximately 8 to 18 minutes, depending on the setting.

▶ To set the massage intensity: switch High Intensity on ☑ or off ☐.

Overview of massage and workout program

Overview of massage and workout programs (→ page 114).

Resetting rear seat settings

Rear Seat Entertainment System:

System ▸▸ Seat ▸▸ Reset

▶ Select Yes or No.

Setting the rear climate control

Rear Seat Entertainment System:

System ▸▸ Climate Control

Activating the SYNC function

▶ Select SYNC.

▶ Switch the function on ☑ or off ☐.

Activating the A/C function

- ▶ Select A/C.
- ▶ Activate ☑ or deactivate ☐ the function.

Controlling the rear climate control automatically

- ▶ Select AUTO.
- ▶ Activate ☑ or deactivate ☐ the function.

Setting the airflow

- ▶ Select Airflow.
- ▶ Set the airflow.

Setting the temperature

- ▶ Select Temperature.
- ▶ Set the temperature.

Setting the air distribution

- ▶ Select Air Distribution.
- ▶ Set the air distribution.

Starting ENERGIZING comfort in the rear passenger compartment

Rear Seat Entertainment System:

↳ System ▸▸ ENERGIZING Comfort

ENERGIZING comfort program overview

- ▶ For an overview of the available ENERGIZING comfort program (→ page 312).

Starting the ENERGIZING comfort program

The ENERGIZING comfort program can only be started via the rear display for the seat to which the rear display belongs.

- ▶ For information on starting ENERGIZING comfort program (→ page 313).

Starting Power Nap for the rear seats

For the rear seats the Power Nap function is available for you as an additional ENERGIZING comfort program.

ⓘ Power Nap can only be started when you are driving due to the battery power required.

The program runs in three phases:

- **Sleep onset phase:** relaxing music is played in this phase, and the warmed seats provide a subtle massage.
- **Sleep phase:** the active functions are deactivated or restricted as much as possible.
- **Waking phase:** in this phase, slightly stimulating music is played, and the air is purified with ionization and scented. The seat is ventilated. The vehicle interior is illuminated with stimulating light.

- ▶ Select Power Nap.
  The program is started.

Configuring Power Nap

- ▶ Call up additional options ☰ for Power Nap.
- ▶ **To set the duration:** select Duration XX Min.
- ▶ Set the desired running time.
- ▶ **To select the function:** switch the functions included in the program on ☑ or off ☐.

Depending on the setting, the program will run for between 15 and 30 minutes.

Adjusting the ambient lighting in the rear passenger compartment

Rear Seat Entertainment System:

System ▸▸ Ambient Light

▶ Change the settings.

ⓘ For information about adjusting the ambient lighting (→ page 156).

Activating/deactivating the panel heating

Rear Seat Entertainment System:

System ▸▸ Panel Heating

▶ Activate or deactivate function.

Adjusting the entertainment system settings

Rear Seat Entertainment System:

System ▸▸ Entertainment System settings

Setting the display brightness

▶ Select Display settings.

▶ Select Brightness.

▶ Adjust the brightness.

Tilting the display

▶ Select Display settings.

▶ Select Display angle.

▶ Tilt the display Up or Down.

Setting the display design

▶ Select Display settings.

▶ Select Day Design, Night Design or Automatic.

Adjusting the equalizer

▶ Select Audio settings.

▶ Select Equalizer.

▶ Set the equalizer.

ⓘ For further information about the equalizer (→ page 387).

Activating audio on cabin

▶ Select Audio settings.

▶ Select Switch the speaker source on or off. If the function is switched on, the current media source is output via the vehicle's speakers.

Setting the language

Rear Seat Entertainment System:

System

▶ Select Language.

▶ Set the desired language.

Switching off the display

Rear Seat Entertainment System:

System

▶ Select Display Off.
The display is switched off.

Navigation

Switching on navigation for the Rear Seat Entertainment System

Rear Seat Entertainment System:

→ Navigation

▶ Alternatively: press the NAVI button on the remote control.
The map appears and shows the current vehicle position.

If a route is active, the following information is displayed to the left of the map:

- If there is a traffic delay on the current route, the duration of the delay will be displayed.

  The display is not available in all countries.
- For the destination : the remaining distance and arrival time
- For an intermediate destination : the remaining distance and arrival time

  The route can include up to four intermediate destinations.
- The compass needle

Depending on the media source currently set the following information is displayed to the right of the map:

- Station name or set frequency
- Track, artist, album
- Album cover
- Track number and number of tracks in the track list

Displaying destination information

Requirements:

- A destination is entered. The route can also include up to four intermediate destinations.

Rear Seat Entertainment System:

→ Navigation

▶ Select Info.
Names and addresses are displayed for the destination and intermediate destinations .

▶ **To return to the map:** select the symbol.

Online and Internet functions

Overview of Internet functions in the rear passenger compartment

The following functions and displays are available in the rear passenger compartment depending on the country and vehicle equipment:

- Connectivity status display (→ page 399)
- Calling up the web browser (→ page 364)
- Calling up Mercedes-Benz Apps (→ page 363)
- Re-establishing an Internet connection

Displaying the Internet connectivity status for the rear passenger compartment

Requirements:

- An Internet connection is set up in the multimedia system at the front via the communication module, depending on the vehicle equipment (→ page 362).

Rear Seat Entertainment System:

→ System

▶ Select Internet Status.

Media

Information about media mode in the rear passenger compartment

The Rear Seat Entertainment System includes a Blu-ray drive (→ page 395), two USB ports and an HDMI port (→ page 396).

Depending on the vehicle model and equipment level, the Blu-ray drive is found:

- at the rear of the center console under the automatic climate control panel
- between the rear shelf and through-load ski bag

Data storage media and devices supported by the Rear Seat Entertainment System:

- SD cards
- USB storage device
- Audio CD
- Data CD
- Data DVD
- Video DVD
- BD (Blu-ray disc) video
- iPod®
- iPhone®
- MTP devices
- Bluetooth® audio

  Bluetooth® audio equipment can only be authorized using the multimedia system.

The Rear Seat Entertainment System supports a total of up to 50,000 files. The Rear Seat Entertainment System can also access files on the multimedia system.

Further information about audio mode (→ page 367).

Further information about Bluetooth® audio (→ page 376).

DVD VIDEO

is a trademark of DVD Format/Logo Licensing Corporation.

Blu-ray Disc™

Blu-ray Disc™, Blu-ray™ and the logos are trademarks of the Blu-ray Disc Association.

Java is a registered trademark of Oracle and/or its affiliates.

The terms HDMI and HDMI High-Definition Multimedia Interface, and the HDMI Logo are trademarks or registered trademarks of HDMI Licensing LLC in the United States and other countries.

Gracenote, the Gracenote logo and logotype, "Powered by Gracenote", MusicID and Playlist Plus are either registered trademarks or trademarks of Gracenote, Inc. in the United States and/or other countries.

Manufactured under license from Dolby Laboratories. Dolby, Dolby Audio and the double-D symbol are trademarks of Dolby Laboratories.

For DTS Patents, see http://patents.dts.com. Manufactured under license from DTS Licensing Limited. DTS, DTS-HD, the Symbol, & DTS and the Symbol together are registered trademarks of DTS, Inc.© DTS, Inc. All rights reserved.

"Made for iPod", and "Made for iPhone," mean that an electronic accessory has been designed to connect specifically to iPod, or iPhone, respectively, and has been certified by the developer to meet Apple performance standards. Apple is not responsible for the operation of this device or its compliance with safety and regulatory standards. Please note that the use of this accessory with iPod, or iPhone may affect wireless performance.

For the USA: iPhone®, iPod®, iPod classic®, iPod nano®, and iPod touch® are trademarks of Apple Inc., registered in the U.S. and other countries. Lightning™ is a trademark of Apple Inc.

For Canada: iPhone, iPod, iPod classic, iPod nano, and iPod touch are trademarks of Apple Inc., registered in the U.S. and other countries. Lightning is a trademark of Apple Inc.

Cinavia notice: this product uses Cinavia technology to limit the use of unauthorized copies of some commercially-produced film and videos and their soundtracks. When a prohibited use of an unauthorized copy is detected, a message will be displayed and playback or copying will be interrupted. More information about Cinavia technology is provided at Cinavia Online Consumer Information Center at http://www.cinavia.com. To request additional information about Cinavia by mail, send a postcard with your mailing address to: Cinavia Consumer Information Center, Box 86851, San Diego, CA, 92138, USA.

This product incorporates proprietary technology under license from Verance Corporation and is protected by U.S. Patent 7,369,677 and other U.S. and worldwide patents issued and pending as well as copyright and trade secret protection for certain aspects of such technology. Cinavia is a trademark of Verance Corporation. Copyright 2004-2012 Verance Corporation. All rights reserved by Verance. Reverse Engineering or disassembly is prohibited.

Inserting a disc

⚠ **WARNING** Risk of injury from laser radiation from the Blu-ray drive

The Blu-ray drive is a class 1 laser product. If you open the housing of the Blu-ray drive,

there is a risk of exposure to invisible laser radiation.

Laser radiation can damage your retina.

- Do not open the housing.
- Always have maintenance work and repairs carried out by a qualified specialist workshop.

Rear Seat Entertainment System:

Media ▸▸ Media Sources ▸▸ Disc

Inserting

- Insert the disc into the drive (→ page 395). The side to be played must face downwards.

Removing

- Press the button to eject the disc (→ page 395).
- Remove the disc.

Switching on media mode - rear passenger compartment

Rear Seat Entertainment System:

Media ▸▸ Media Sources

Media sources connected to the multimedia system are named with the addition "COMAND".

- Select the media source.

Blu-ray/DVD mode

DVD/Blu-ray functions overview

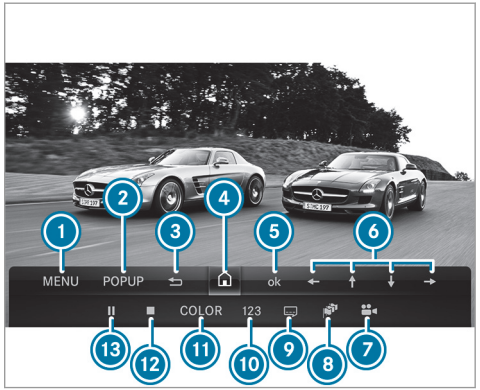

1. Activates the DVD/Blu-ray control menu
2. Calls up the Blu-ray pop-up menu (only available for Blu-ray Discs)
3. Exits DVD/Blu-ray functions or go up a level in the DVD/Blu-ray menu

④ Opens the video display of the Rear Seat Entertainment System
⑤ Confirms entry in control menu
⑥ Navigates through the Blu-ray/DVD menu
⑦ Changes camera perspectives
⑧ Changes the audio language
⑨ Shows or hides subtitles
⑩ Selects a scene
⑪ Color selection menu
⑫ Stops playback
⑬ Pauses playback

Blu-ray/DVD menu

Rear Seat Entertainment System:

Media ▸▸ Media Sources ▸▸ Disc

Calling up the Blu-ray or DVD menu

The Blu-ray or DVD menu is the menu saved on the disc itself.

▶ To show disc functions: press the OK button on the remote control.

▶ Select Menu.
The Blu-ray or DVD menu appears.

Selecting menu items in the Blu-ray or DVD menu

▶ Select a menu item.

▶ Press the OK button on the remote control.

▶ Select Select.

▶ Press the OK button on the remote control.
The action is carried out or a submenu appears.

Exiting the Blu-ray or DVD menu

▶ Press the ⮌ button on the remote control until you see the film.

Playback option in Blu-ray/DVD mode

Rear Seat Entertainment System:

Media ▸▸ Media Sources ▸▸ Disc

Pausing or continuing playback

▶ To show disc functions: press the OK button on the remote control.

▶ To pause playback: select ❚❚.

▶ To stop playback: select ■.

▶ To continue playback: select ▶.

Fast forwarding or rewinding

▶ Press and hold the ⏮ or ⏭ button in the DVD/Blu-ray control menu until the desired position has been reached.

Selecting a Blu-ray/DVD chapter

Rear Seat Entertainment System:

Media ▸▸ Media Sources ▸▸ Disc

▶ Call up the Blu-ray or DVD menu (→ page 404).
The Blu-ray or DVD menu appears.

▶ Select a scene or chapter.

▶ Press the OK button on the remote control.

▶ Select the chapter number.

▶ Press the OK button on the remote control.
After a short time, playback starts from the selected position.

Selecting a film or track

Rear Seat Entertainment System:

→ Media ▸▸ Media Sources ▸▸ Disc

- Call up the Blu-ray or DVD menu (→ page 404).
  The Blu-ray or DVD menu appears.
- Select the film or track.
- Press the OK button on the remote control.
- Call up the selection list.
- Select a film or track.

Switching to HDMI mode
Requirements:

- A media source is connected to the Rear Seat Entertainment System via the HDMI port (→ page 396).
- There is an HDMI signal to the Rear Seat Entertainment System.

Rear Seat Entertainment System:

→ Media ▸▸ Media Sources

- **To show the menu:** press the ◀ button.
- Select HDMI.
  The Playback content display appears.
- **To show the menu:** press the ◀ button.
- Select Full Screen.

Radio

Switching on the radio

Rear Seat Entertainment System:

→ Radio

- Alternatively: press the RADIO button on the remote control. Further information about radio mode (→ page 380).

Sound

Overview of the Rear Seat Entertainment System sound settings

The equalizer functions, automatic volume adjustment and dynamic range control are available in the tone menu of the Rear Seat Entertainment System.

Further information about the sound system (→ page 387).

Information about dynamic range limitation

The dynamic range of the audio signal can be adjusted for the playback device. The Dynamic Range Control function compensates for differences in the quietest and loudest sounds. This raises the volume of quiet dialog compared to loud sound effects, for example.

The following settings are available:

- Automatic
  The dynamic range is set automatically.
  This setting is only available for Blu-ray discs.
- Standard
  The dynamic range is restricted to improve the listening experience and comprehension.
- Maximum
  The dynamic range is not restricted. The playback volume is the same as the original soundtrack.

Setting dynamic range limitation
Requirements:

- There is no media playback.

Rear Seat Entertainment System:

→ Media ▸▸ [♪] Sound

▸▸ Dynamic Range Control

▶ Select the setting.

ASSYST PLUS service interval display

Function of the ASSYST PLUS service interval display

The ASSYST PLUS service interval display on the Instrument Display provides information on the remaining time or distance before the next service due date.

You can hide this service display using the back button on the left-hand side of the steering wheel.

Depending on how the vehicle is used, the ASSYST PLUS service interval display may shorten the service interval, e.g. in the following cases:

- Mainly short-distance driving
- When the engine is often left idling for long periods
- In the event of frequent cold start phases

Mercedes-Benz recommends avoiding such operating conditions.

You can obtain information concerning the servicing of your vehicle from a qualified specialist workshop, e.g. an authorized Mercedes-Benz Center.

Displaying the service due date

On-board computer:

→ Service ▸▸ ASSYST PLUS

The next service due date is displayed.

▶ **To exit the display:** press the back button on the left-hand side of the steering wheel.

Be sure to also pay attention to the following related topic:

- Operating the on-board computer (→ page 264).

Information on regular maintenance work

! **NOTE** Premature wear through failure to observe service due dates

Service work which is not carried out at the right time or incompletely can lead to increased wear and damage to the vehicle.

▶ Always observe the prescribed service intervals.

▶ Always have the prescribed service work carried out at a qualified specialist workshop.

Special service requirements

The prescribed service interval is based on normal operation of the vehicle. Maintenance work will need to be performed more often if the vehicle is operated under arduous conditions or increased loads.

The ASSYST PLUS service interval display is only an aid. The driver of the vehicle bears responsibility as regards to whether maintenance work needs to be performed more often than specified based on the actual operating conditions and/or loads.

Examples of arduous operating conditions:

- regular city driving with frequent intermediate stops
- mainly short-distance driving

- frequent operation in mountainous terrain or on poor road surfaces
- when the engine is often left idling for long periods
- operation in particularly dusty conditions and/or if air-recirculation mode is frequently used

In these or similar operating conditions, have the interior air filter, engine air cleaner, engine oil and oil filter etc. changed more frequently. The tires must be checked more frequently if the vehicle is operated under increased loads. Further information can be obtained at a qualified specialist workshop.

Battery disconnection periods

The ASSYST PLUS service interval display can only calculate the service due date when the battery is connected.

▶ Note down the service due date displayed on the instrument display before disconnecting the battery (→ page 407).

Engine compartment

Active hood (pedestrian protection)

Operation of the active hood (pedestrian protection)

In certain accident situations, the risk of injury to pedestrians can be reduced by the actuation of the active hood. The rear area of the hood is raised by approximately 80 mm.

For the drive to the workshop, reset the triggered active hood yourself. After the active hood has been triggered, pedestrian protection may be limited.

A qualified specialist workshop must re-instate the full functionality of the active hood.

The active hood is not available in all countries.

Resetting the active hood

⚠ **WARNING** Risk of burns from hot component parts in the engine compartment

Certain components in the engine compartment can be very hot, e.g. the engine, the radiator and parts of the exhaust system.

▶ Allow the engine to cool down and only touch component parts described in the following.

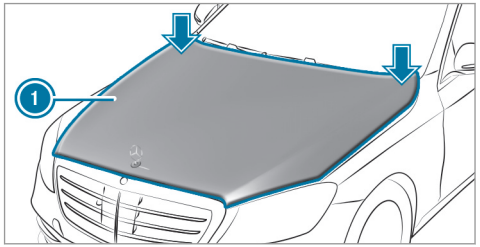

▶ With your hand flat, push down active hood ① in the area around the hinges on both sides (arrows).
The hood must engage in position.

▶ If the active hood can be raised slightly at the rear in the area of the hinges, repeat the step until it engages correctly.

Opening/closing the hood

WARNING Risk of accident if the engine hood is unlatched while driving

An unlocked engine hood may open up when the vehicle is in motion and block your view.

- Never unlatch the engine hood while driving.
- Before every trip, ensure that the engine hood is latched.

WARNING Risk of accident and injury when opening and closing the engine hood

When opening or closing the engine hood, it may suddenly drop into the end position.

There is a risk of injury for anyone in the engine hood's range of movement.

- Only open or close the engine hood when there are no persons in the engine hood's range of movement.

WARNING Danger of burns when opening the hood

If you open the hood when the engine has overheated or during a fire in the engine compartment, you could come into contact with hot gases or other escaping operating fluids.

- Before opening the hood, allow the engine to cool down.
- In the event of a fire in the engine compartment, keep the hood closed and call the fire service.

WARNING Risk of injury due to moving parts

Certain components in the engine compartment may continue to move or suddenly move again even after the ignition has been switched off, e.g. the cooler fan.

Make sure of the following before performing tasks in the engine compartment:

- Switch the ignition off.
- Never touch the danger zone surrounding moving component parts, e.g. the rotation area of the fan.
- Remove jewelry and watches.
- Keep items of clothing and hair away from moving parts.

WARNING Risk of injury from touching component parts under voltage

The ignition system and the fuel injection system work under high voltage. If you touch component parts which are under voltage, you could receive an electric shock.

- Never touch component parts of the ignition system or the fuel injection system when the ignition is switched on.

WARNING Risk of burns from hot component parts in the engine compartment

Certain components in the engine compartment can be very hot, e.g. the engine, the radiator and parts of the exhaust system.

▶ Allow the engine to cool down and only touch component parts described in the following.

⚠ **WARNING** Risk of injury from using the windshield wipers while the engine hood is open

When the engine hood is open and the windshield wipers are set in motion, you can be trapped by the wiper linkage.

▶ Always switch off the windshield wipers and ignition before opening the engine hood.

Plug-in hybrid: observe the notes in the Supplement. Otherwise, you may fail to recognize dangers.

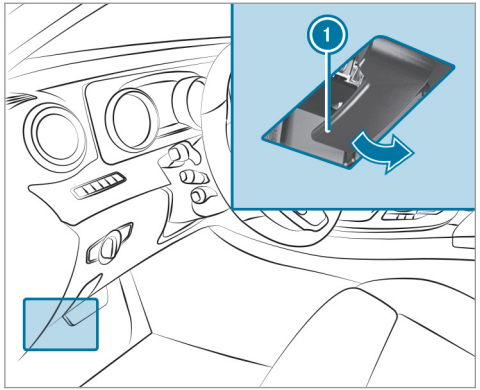

▶ **To open:** pull lever ① to release the hood.

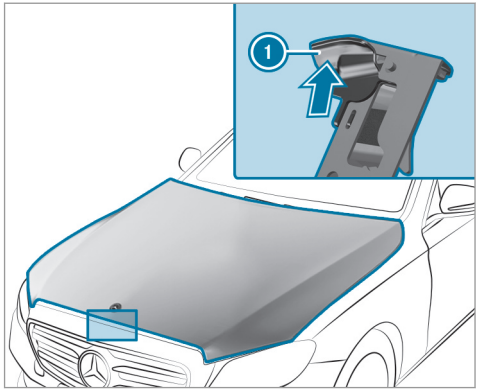

▶ Push handle ① of the hood catch upwards and lift the hood by approximately 15 in (40 cm).

▶ **To close:** lower the hood and let it fall from a height of approximately 8 in (20 cm).

▶ If the hood can still be lifted slightly, open the hood again and close it with a little more force until it engages correctly.

Engine oil

Checking the engine oil level using the oil dipstick

WARNING Risk of burns from hot component parts in the engine compartment

Certain components in the engine compartment can be very hot, e.g. the engine, the radiator and parts of the exhaust system.

▶ Allow the engine to cool down and only touch component parts described in the following.

Plug-in hybrid: observe the notes in the Supplement. Otherwise, you may not recognize dangers.

Requirements:

- The engine must have an oil dipstick. If not, the engine oil level can be checked only with the on-board computer (→ page 411).

Depending on the engine, the oil dipstick may be installed in the engine compartment in different locations.

The waiting time before checking the oil level when the engine is at normal operating temperature is five minutes.

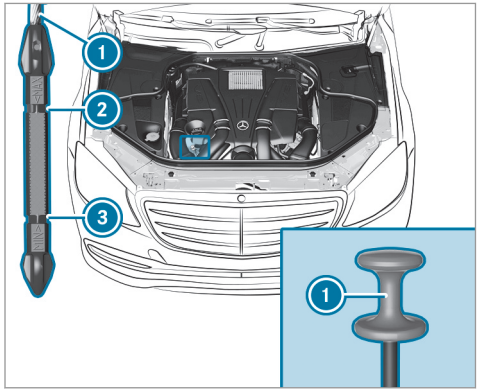

▶ Park the vehicle on a level surface.

▶ Pull oil dipstick 1 out and wipe off.

▶ Slowly slide oil dipstick 1 into the guide tube to the stop, and take it out again after approximately three seconds.
- Oil level is correct: oil level is between 2 and 3.
- Oil level too low: oil level is at 3 or below.
- Oil level too high: oil level is above 2.

▶ If the oil level is too low, add 1.1 US qt (1 liter) of engine oil.

▶ If the oil level is too high, have the excess engine oil removed as soon as possible at a qualified specialist workshop.

Checking the engine oil level using the on-board computer

Requirements:

- The engine has warmed up.
- The vehicle is parked on a level surface.
- The engine is running at idle speed.

The engine oil level is determined during driving. Determining the engine oil level can take up to

30 minutes with a normal driving style and even longer with an active driving style.

On-board computer:

→ Service ▸▸ Engine Oil Level

You will see one of the following messages on the multifunction display:

- Measuring Engine Oil Level...: measurement of the oil level is not yet possible.

▶ Repeat the request after a maximum of 30 minutes driving.

- Engine Oil Level OK and the bar display for indicating the oil level on the multifunction display is green and is between "min" and "max": the oil level is correct.
- Engine Oil Level Add 1.0 l and the bar display for indicating the oil level on the multifunction display is orange and is below "min":

▶ Add 1.1 US qt (1 l) of engine oil.

- Reduce Engine Oil Level and the bar display for indicating the oil level on the multifunction display is orange and is above "max":

▶ Drain off any excess engine oil that has been added. To do so, consult a qualified specialist workshop.

- For Engine Oil Level Switch Ignition On:

▶ Switch on the ignition to check the engine oil level.

- Engine Oil Level System Inoperative: sensor faulty or not inserted.

▶ Consult a qualified specialist workshop.

- Engine Oil Level System Currently Unavail.:

▶ Close the hood.

Refilling engine oil

⚠ **WARNING** Risk of burns from hot component parts in the engine compartment

Certain components in the engine compartment can be very hot, e.g. the engine, the radiator and parts of the exhaust system.

▶ Allow the engine to cool down and only touch component parts described in the following.

⚠ **WARNING** Risk of fire and injury from engine oil

If engine oil comes into contact with hot component parts in the engine compartment, it may ignite.

▶ Make sure that no engine oil is spilled next to the filler opening.

▶ Allow the engine to cool off and thoroughly clean the engine oil from component parts before starting the vehicle.

! **NOTE** Engine damage caused by an incorrect oil filter, incorrect oil or additives

▶ Do not use engine oils or oil filters which do not correspond to the specifications explicitly prescribed for the service intervals.

▶ Do not alter the engine oil or oil filter in order to achieve longer change intervals than prescribed.

▶ Do not use additives.

▶ Follow the instructions in the service interval display regarding the oil change.

NOTE Damage caused by refilling too much engine oil

Too much engine oil can damage the engine or the catalytic converter.

▶ Have excess engine oil removed at a qualified specialist workshop.

ⓘ Depending on the engine, the cap may be installed in the engine compartment in different locations.

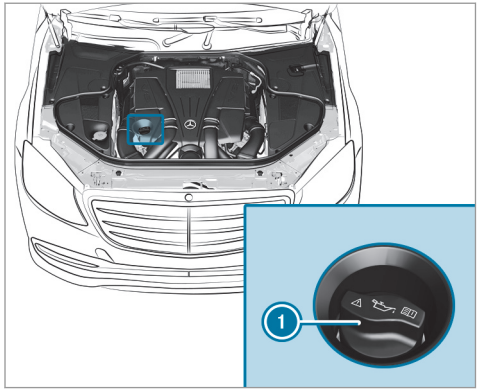

▶ Turn cap ① counter-clockwise and remove it.

▶ Add engine oil.

▶ Replace cap ① and turn it clockwise as far as it will go.

▶ Check the oil level again (→ page 411).

Checking the coolant level

WARNING Risk of burns from hot component parts in the engine compartment

Certain components in the engine compartment can be very hot, e.g. the engine, the radiator and parts of the exhaust system.

▶ Allow the engine to cool down and only touch component parts described in the following.

WARNING Risk of scalding from hot coolant

The engine cooling system is pressurized, particularly when the engine is warm. If you open the cap, you could be scalded by hot coolant spraying out.

▶ Let the engine cool down before opening the cap.

▶ When opening the cap, wear protective gloves and safety glasses.

▶ Open the cap slowly to release pressure.

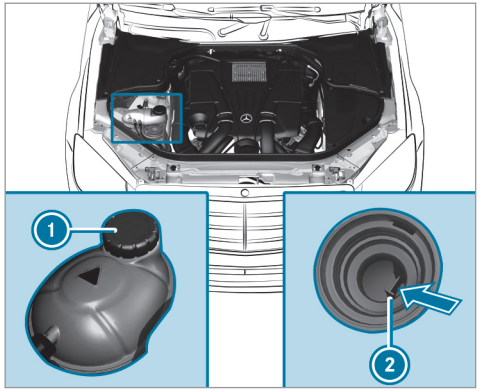

- Park the vehicle on a level surface.
- Check the coolant temperature display in the instrument cluster.
  The coolant temperature must be in the bottom quarter of the temperature display.
- If necessary, remove the cover.
- Slowly turn cap 1 counter-clockwise to relieve overpressure.
- Continue turning cap 1 counter-clockwise and remove it.

The coolant level is correct in the following cases:

- If the engine is cold, up to marker bar 2.
- If the engine is warm, up to 0.6 in (1.5 cm) over marker bar 2.

- If necessary, add coolant that has been approved by Mercedes-Benz.
- Further information on coolant (→ page 486)

Refilling the windshield washer system

WARNING Risk of burns from hot component parts in the engine compartment

Certain components in the engine compartment can be very hot, e.g. the engine, the radiator and parts of the exhaust system.

- Allow the engine to cool down and only touch component parts described in the following.

WARNING Danger of burns when opening the hood

If you open the hood when the engine has overheated or during a fire in the engine compartment, you could come into contact with hot gases or other escaping operating fluids.

- Before opening the hood, allow the engine to cool down.
- In the event of a fire in the engine compartment, keep the hood closed and call the fire service.

WARNING - Risk of fire and injury from windshield washer concentrate

Windshield washer concentrate is highly flammable. It could ignite if it comes into contact with hot engine component parts or the exhaust system.

- Make sure that no windshield washer concentrate spills out next to the filler opening.

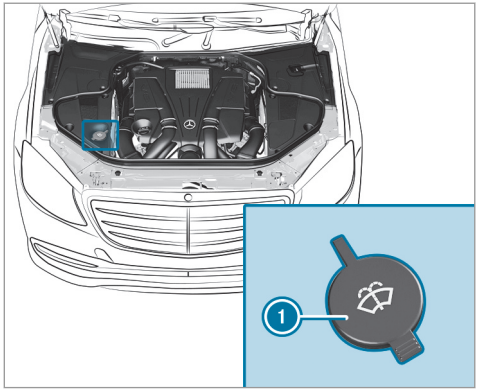

▶ Remove cap ① by the tab, place on the edge of the filler opening and engage in place.

▶ Refilling washer fluid.

Keeping the air-water duct free

▶ Keep the area between the hood and the windshield free of deposits, e.g. ice, snow and leaves.

Cleaning and care

Notes on washing the vehicle in a car wash

⚠ **WARNING** Risk of accident due to reduced braking effect after washing the vehicle

The braking effect is reduced after washing the vehicle.

▶ After the vehicle has been washed, brake carefully while paying attention to the traffic conditions until the braking effect has been fully restored.

NOTE Damage due to unsuitable car wash

▶ Before driving into a car wash make sure that the car wash is suitable for the vehicle dimensions.

▶ Ensure there is sufficient ground clearance between the underbody and the guide rails of the car wash.

▶ Ensure that the clearance width of the car wash, in particular the width of the guide rails, is sufficient.

To avoid damage to your vehicle when using a car wash, ensure the following beforehand:

- Active Distance Assist DISTRONIC and the HOLD function are deactivated.
- The 360° Camera or the rear view camera is switched off.
- The side windows and sliding sunroof are completely closed.
- The blower for the ventilation/heating is switched off.
- The windshield wiper switch is in position 0.
- In car washes with a conveyor system: neutral N is engaged.
- The SmartKey is at a distance of at least 10 ft (3 m) away from the vehicle, otherwise the trunk lid could open unintentionally.

ⓘ If you would like to leave the vehicle while it is being washed, make sure the SmartKey is located in the vehicle. The park position P is otherwise automatically engaged.

ⓘ If, after the car wash, you remove the wax from the windshield and wiper rubbers, this will prevent smearing and reduce wiper noise.

Information on using a power washer

⚠ **WARNING** Risk of accident when using high-pressure cleaning equipment with round-spray nozzles

The water jet from a round-spray nozzle (dirt grinder) may cause damage to tires and suspension components that is not visible.

Components damaged in this way may fail unexpectedly.

▶ Do not use high-pressure cleaning equipment with round-spray nozzles to clean your vehicle.

▶ Damaged tires or suspension components must be replaced immediately.

To avoid damage to your vehicle, observe the following when using a power washer:

- keep the SmartKey at least 10 ft (3 m) away from the vehicle. Otherwise the trunk lid could open unintentionally.
- maintain a distance of at least 11.8 in (30 cm) to the vehicle.
- **vehicles with decorative foil:** parts of your vehicle are covered with a decorative foil. Maintain a distance of at least 27.6 in (70 cm) between the foil-covered parts of the vehicle and the nozzle of the power washer. Move the power washer nozzle around whilst cleaning. The water temperature of the power washer must not exceed 140 °F (60 °C).
- observe the information on the correct distance in the equipment manufacturer's operating instructions.
- do not point the nozzle of the power washer directly at sensitive parts such as tires, slits, electrical components, batteries, light bulbs and ventilation slots.

Washing the vehicle by hand

Observe the legal requirements, e.g. in a number of countries, washing by hand is only permitted in specially designated wash bays.

▶ Use a mild cleaning agent, e.g. car shampoo.

▶ Wash the vehicle with lukewarm water using a soft car sponge. When doing so, do not expose the vehicle to direct sunlight.

▶ Carefully hose the vehicle off with water and dry using a chamois. Take care not to point the water jet directly towards the air inlet grille below the hood.

Notes on paintwork/matte finish paintwork care

Observe the following information:

	Cleaning and care	Avoiding paintwork damage
Paintwork	• Insect remains: soak with insect remover and rinse off the treated areas afterwards. • Bird droppings: soak with water and rinse off afterwards. • Tree resin, oils, fuels and greases: remove by rubbing gently with a cloth soaked in petroleum ether or lighter fluid. • Coolant and brake fluid: remove with a damp cloth and clean water. • Tar stains: use tar remover. • Wax: use silicone remover.	• Do not attach stickers, films or similar materials. • Remove dirt immediately, where possible.

	Cleaning and care	Avoiding paintwork damage
Matte finish	Only use care products approved for Mercedes-Benz.	• Do not polish the vehicle and alloy wheels. • Only use car washes that correspond to the latest engineering standards. • Do not use car wash programs with a final hot wax treatment. • Do not use paint cleaners, buffing or polishing products, gloss preservers, e.g. wax. • Always have paintwork repairs carried out at a qualified specialist workshop.

Notes on cleaning decorative foils

Observe the notes on matte finish care in the chapter "Notes on paintwork/matte finish paintwork care" (→ page 417). They also apply to matte decorative foils.

Observe the following information:

Cleaning	Avoiding damage to the decorative foil
• For cleaning, use plenty of water and a mild cleaning agent without additives or abrasive substances, e.g. a car shampoo approved for Mercedes-Benz. • Remove dirt immediately, where possible, whilst avoiding rubbing too hard. There is otherwise a risk of damaging the decorative foil irreparably. • If there is dirt on the finish or if the decorative foil is dull: use the Paint Cleaner recommended and approved for Mercedes-Benz. • Insect remains: soak with insect remover and rinse off the treated areas afterwards. • Bird droppings: soak with water and rinse off afterwards. • To prevent water stains, dry a foil-wrapped vehicle with a soft, absorbent cloth after every car wash.	• The service life and color of decorative foils are impaired by: - Sunlight - Temperature, e.g. hot air blower - Weather conditions - Stone chippings and dirt - Chemical cleaning agents - Oily products • Do not use polish on matte decorative foil. Polishing will have the effect of shining the foil-wrapped surface. • Do not treat matte or structured decorative foils with wax. Permanent stains may occur.

Scratches, corrosive deposits, areas affected by corrosion and damage caused by incorrect care cannot always be completely repaired. In such cases, visit a qualified specialist workshop.

You can obtain more information on care and cleaning products from the manufacturer.

In the case of foil-wrapped surfaces, optical differences may occur between the surfaces that were not protected by a decorative foil after removing a decorative foil.

ⓘ Have work or repairs to decorative foils carried out at a qualified specialist workshop, e.g. in an authorized Mercedes-Benz Center.

Cleaning Night View Assist

Camera behind the windshield

NOTE Damage to the camera lens when cleaning

If you clean the camera lens yourself or spray glass cleaner on the camera lens, you could damage the camera lens.

- When cleaning the field of vision of the driving systems, do not spray glass cleaner on the camera lens.
- If the camera lens is dirty, please contact a qualified specialist workshop.

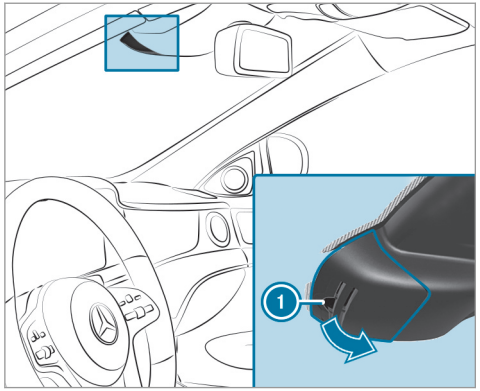

- Fold down the camera cover by handle recess 1.
- Use a cloth to clean the windshield in front of the camera.

Camera in the radiator grill

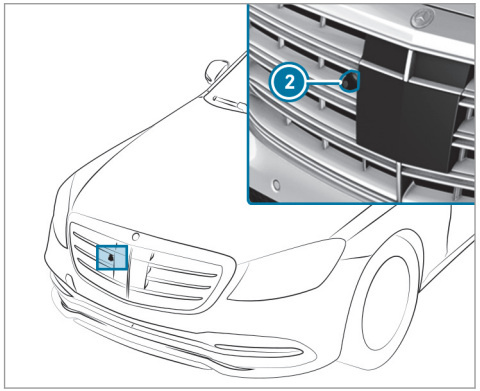

Camera lens 2 is cleaned at regular intervals by operating the windshield washer system.

- Use clear water and a soft cloth to clean camera lens 2 when it is very dirty.

Notes on care of vehicle parts

⚠ **WARNING** Risk of entrapment if the windshield wipers are switched on while the windshield is being cleaned

If the windshield wipers are set in motion while you are cleaning the windshield or wiper blades, you can be trapped by the wiper arm.

▶ Always switch off the windshield wipers and the ignition before cleaning the windshield or wiper blades.

⚠ **WARNING** Risk of burns from the tailpipe and tailpipe trims

The exhaust tailpipe and tailpipe trims can become very hot. If you come into contact with these parts of the vehicle, you could burn yourself.

▶ Always be particularly careful around the tailpipe and the tailpipe trims and supervise children especially closely in this area.

▶ Allow vehicle parts to cool down before touching them.

Observe the following information:

	Notes on cleaning and care	Avoiding vehicle damage
Wheels/rims	Use water and acid-free wheel cleaners.	• Do not use acidic wheel cleaners to remove brake dust. This could damage wheel bolts and brake components. • To avoid corrosion of the brake discs and brakepads, drive the vehicle for a few minutes after cleaning before parking it. The brake discs and brakepads warm up and dry out.
Windows	Clean windows inside and outside with a damp cloth and with a cleaning agent recommended for Mercedes-Benz.	Do not use dry cloths or abrasive or solvent-based cleaning agents to clean the inside of windows.
Wiper blades	Fold out the wiper blades and clean them using a damp cloth.	Do not clean the wiper blades too often.

	Notes on cleaning and care	Avoiding vehicle damage
Exterior lighting	Clean the lenses with a wet sponge and mild cleaning agent, e.g. car shampoo.	Only use cleaning agents or cleaning cloths that are suitable for plastic lenses.
Sensors	Clean the sensors in the front and rear bumper and in the radiator grill with a soft cloth and car shampoo.	When using a power washer, maintain a minimum distance of 11.8 in (30 cm).
Rear view camera and **360° Camera**	• Open the camera cover with the multimedia system(→ page 243) . • Use clean water and a soft cloth to clean the camera lens.	Do not use a power washer.
Tailpipes	Clean with a cleaning agent recommended for Mercedes-Benz, especially in the winter and after washing the vehicle.	Do not use acidic cleaning agents.

Notes on care of the interior

⚠ **WARNING** Risk of injury from plastic parts breaking off after the use of solvent-based care products

Care and cleaning products containing solvents can cause surfaces in the cockpit to become porous.

When the airbags are deployed, plastic parts may break away.

▶ Do not use any care or cleaning products containing solvents to clean the cockpit.

⚠ **WARNING** Risk of injury or death from bleached seat belts

Bleaching or dyeing seat belts can severely weaken them.

This can, for example, cause seat belts to tear or fail in an accident.

▶ Never bleach or dye seat belts.

Observe the following information:

	Notes on cleaning and care	Avoiding vehicle damage
Seat belts	Clean with lukewarm and soapy water.	• Do not use chemical cleaning agents. • Do not dry seat belts by heating them to over 176 °F (80 °C) or exposing them to direct sunlight.
Display	Clean the surface carefully with a microfiber cloth and a suitable display care product (TFT/LCD).	• Switch off the display and let it cool down. • Do not use any other agents.
Plastic trim	• Clean with a damp microfiber cloth. • For heavy soiling: use a care product recommended for Mercedes-Benz.	• Do not attach stickers, films or similar materials. • Do not allow cosmetics, insect repellent or sun cream to come in contact with the plastic trim.
Real wood/trim elements	• Clean with a microfiber cloth. • Black piano-lacquer look: clean with a damp cloth and soapy water. • For heavy soiling: use a care product recommended for Mercedes-Benz.	Do not use solvent-based cleaning agents, polishes or waxes.
Headliner	Clean with a brush or dry shampoo.	
Carpet	Use a carpet and textile cleaning agent recommended for Mercedes-Benz.	

	Notes on cleaning and care	Avoiding vehicle damage
Genuine leather seat covers	• Clean with a damp cloth and then wipe with a dry cloth. • Leather care: use a leather care agent that has been recommended for Mercedes-Benz.	• Do not allow the leather to become too damp. • Do not use a microfiber cloth.
DINAMICA seat covers	Clean with a damp cloth.	Do not use a microfiber cloth.
Imitation leather seat covers	Clean with a damp cloth and 1% soapy water.	Do not use a microfiber cloth.
Cloth seat covers	Clean with a damp microfiber cloth and 1% soapy water and allow to dry.	
EASY-PACK trunk box	Clean with a damp cloth.	Do not use any alcohol-based thinners, gasoline or abrasive cleaning agents.

Emergency

Removing the safety vest

The safety vests are located in stowage spaces in the front door.

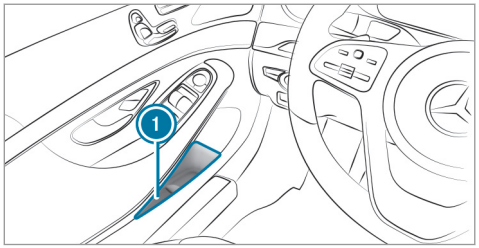

- ▶ Take the safety vest bag out of stowage space ①.
- ▶ Open the safety vest bag and pull out the safety vest.

ⓘ Safety vests can also be stored in the rear door stowage spaces.

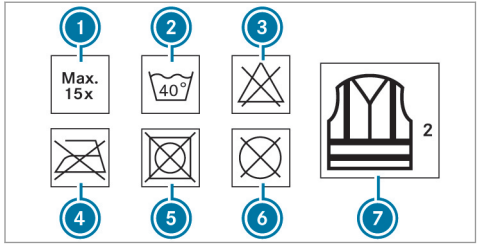

① Maximum number of washes
② Maximum wash temperature
③ Do not bleach
④ Do not iron
⑤ Do not tumble dry
⑥ Do not dry clean
⑦ This is a class 2 vest

The requirements defined by the legal standard are only fulfilled in the following cases:

- If the safety vest is the correct size
- The safety vest is fully closed whilst being worn

Replace the safety vest in the following cases:

- The reflective strips are damaged or dirt on the reflective strips can no longer be removed
- The maximum number of washes is exceeded
- The fluorescence has faded

Flat tire

Notes on flat tires

⚠ **WARNING** Risk of accident due to a flat tire

A flat tire severely affects the driving characteristics as well as the steering and braking of the vehicle.

Tires without run-flat characteristics:

- ▶ Do not drive on with a flat tire.
- ▶ Change the flat tire immediately with an emergency spare wheel or spare wheel. Alternatively, consult a qualified specialist workshop.

Tires with run-flat characteristics:

▶ Observe the information and warning notes on MOExtended tires (run-flat tires).

In the event of a flat tire, the following options are available depending on your vehicle's equipment:

- **Vehicles with MOExtended tires:** it is possible to continue the journey for a short period of time. Make sure you observe the notes on MOExtended tires (run-flat tires) (→ page 426).
- **Vehicles with a TIREFIT kit:** you can repair the tire so that it is possible to continue the journey for a short period of time. To do this, use the TIREFIT kit (→ page 427).
- **Vehicles with Mercedes me connect:** you can make a call for breakdown assistance via the overhead control panel in the case of a breakdown (→ page 355).
- **All vehicles:** change the wheel (→ page 471).

ⓘ The emergency spare wheel is only available in certain countries.

Notes on MOExtended tires (run-flat tire)

⚠ **WARNING** Risk of accident when driving in emergency mode

When driving in emergency mode, the handling characteristics are impaired. e.g. when cornering, when accelerating strongly and when braking.

▶ Do not exceed the permissible maximum speed for MOExtended tires.

▶ Avoid any abrupt steering and driving maneuvers as well as driving over obstacles (curbs, pot holes, off-road). This applies, in particular, to a loaded vehicle.

▶ Stop driving in the emergency mode if you notice:

- banging noise
- vehicle vibration
- smoke which smells like rubber
- continuous ESP® intervention
- cracks in tire side walls

▶ After driving in emergency mode have the rims checked by a qualified specialist workshop with regard to their further use.

▶ The defective tire must be replaced in every case.

With MOExtended tires (run-flat tire), you can continue to drive your vehicle even if there is a total loss of pressure in one or more tires. However, the tire affected must not show any clearly visible damage.

You can recognize MOExtended tires by the MOExtended marking which appears on the side wall of the tire.

Vehicles with tire pressure monitoring system: MOExtended tires may only be used in conjunction with an activated tire pressure monitoring system.

If a pressure loss warning message appears in the multifunction display, proceed as follows:

- Check the tire for damage.
- If driving on, observe the following notes.

Driving distance possible in emergency mode after the pressure loss warning:

Load condition	Driving distance possible in emergency mode
Partially laden	50 miles (80 km)
Fully laden	19 miles (30 km)

The driving distance possible in emergency mode may vary depending on the driving style. Observe the maximum permissible speed of 50 mph (80 km/h).

If a tire has gone flat and cannot be replaced with an MOExtended tire, you can use a standard tire as a temporary measure.

TIREFIT kit storage location

The TIREFIT kit is located under the trunk floor.

Mercedes vehicles: observe the notes in the Supplement. Otherwise, you may not recognize dangers.

Plug-in hybrid: observe the notes in the Supplement. Otherwise, you may not recognize dangers.

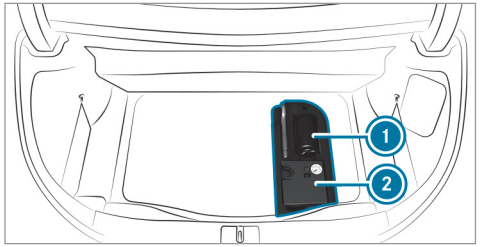

1 Tire sealant bottle
2 Tire inflation compressor

Using the TIREFIT kit

Requirements:

- Tire sealant bottle
- Enclosed TIREFIT sticker
- Tire inflation compressor
- Disposable gloves

You can use TIREFIT tire sealant to seal perforation damage of up to 0.16 in (4 mm), particularly those in the tire contact surface. You can use TIREFIT in outside temperatures down to -4 °F (-20 °C).

WARNING Risk of accident when using tire sealant

In the following situations in particular, the tire sealant is unable to provide sufficient breakdown assistance, as it is unable to seal the tire properly:

- There are cuts or punctures in the tire larger than those previously mentioned.
- The wheel rim is damaged.

- You have driven at very low tire pressure or on a flat tire.

▶ Do not drive on.

▶ Consult a qualified specialist workshop.

⚠ WARNING Risk of injury and poisoning from tire sealant

The tire sealant is harmful and causes irritation. Do not allow it to come into contact with the skin, eyes or clothing, and do not swallow it. Do not inhale tire sealant fumes. Keep the tire sealant away from children.

If you come into contact with the tire sealant, observe the following:

▶ Rinse off the tire sealant from your skin immediately using water.

▶ If tire sealant gets into your eyes, thoroughly rinse out the eyes using clean water.

▶ If tire sealant has been swallowed, immediately rinse out the mouth thoroughly and drink plenty of water. Do not induce vomiting and seek medical attention immediately.

▶ Change out of any clothes contaminated with tire sealant immediately.

▶ If allergic reactions occur, seek medical attention immediately.

! NOTE Overheating due to the tire inflation compressor running too long

▶ Do not run the tire inflation compressor for longer than eight minutes without interruption.

Comply with the manufacturer's safety notes on the sticker on the tire inflation compressor.

Have the tire sealant bottle replaced every four years at a qualified specialist workshop.

▶ Do not remove any foreign objects which have entered the tire.

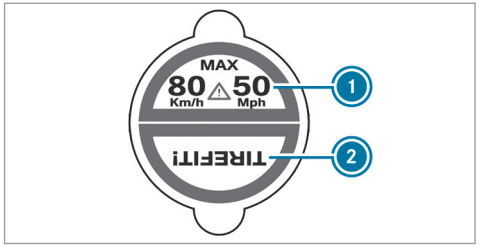

▶ Affix part ① of the TIREFIT sticker to the instrument cluster within the driver's field of vision.

▶ Affix part ② of the TIREFIT sticker near the valve on the wheel with the faulty tire.

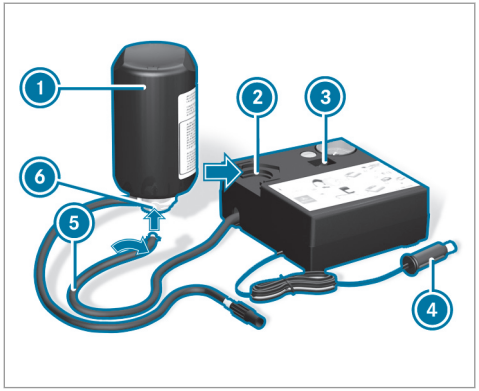

- Pull plug 4 with the cable and hose 5 out of the tire inflation compressor housing.
- Push the plug of hose 5 into flange 6 of tire sealant bottle 1 until the plug engages.
- Place tire sealant bottle 1 head downwards into recess 2 of the tire inflation compressor.

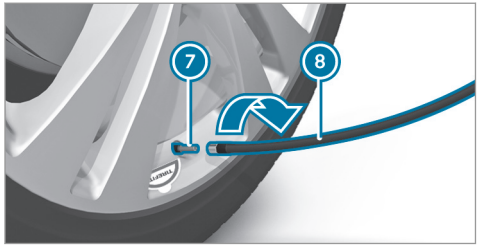

- Remove the cap from valve 7 on the faulty tire.
- Screw filling hose 8 onto valve 7.
- Insert connector 4 into a 12 V socket in your vehicle.
- Switch on the ignition.
- Press on and off switch 3 on the tire inflation compressor.
  The tire inflation compressor is switched on. The tire is inflated. First, tire sealant is pumped into the tire. The pressure may briefly rise to approximately 500 kPa (5 bar/73 psi).

Do not switch off the tire inflation compressor during this phase.

- Let the tire inflation compressor run for a maximum of eight minutes.
  The tire should then have attained a tire pressure of at least 180 kPa (1.8 bar/26 psi).

If tire sealant leaks out, make sure you clean the affected area as quickly as possible. It is preferable to use clean water.

If you get tire sealant on your clothing, have it cleaned as soon as possible with perchloroethylene.

If a tire pressure of 180 kPa (1.8 bar/26 psi) has not been attained after eight minutes:

- Switch off the tire inflation compressor.
- Unscrew the filling hose from the valve of the faulty tire.

Please note that tire sealant may leak out when unscrewing the filling hose.

- Drive forwards or reverse very slowly for approximately 33 ft (10 m).

▶ Pump up the tire again.
After a maximum of eight minutes the tire pressure must be at least 180 kPa (1.8 bar/26 psi).

⚠ **WARNING** Risk of accident due to the specified tire pressure not being achieved

If the specified tire pressure is not achieved after the specified time, the tire is too badly damaged. The tire sealant cannot repair the tire in this instance.

Damaged tires and a tire pressure that is too low can significantly impair braking and handling characteristics.

▶ Do not drive on.

▶ Consult a qualified specialist workshop.

If a tire pressure of 180 kPa (1.8 bar/26 psi) has been attained after eight minutes:

⚠ **WARNING** Risk of accident from driving with sealed tires

A tire temporarily sealed with tire sealant impairs driving characteristics and is not suitable for higher speeds.

▶ Adapt your driving style accordingly and drive carefully.

▶ Do not exceed the maximum speed limit with a tire that has been repaired using tire sealant.

Observe the maximum permissible speed for a tire sealed with tire sealant 50 mph (80 km/h).

▶ Affix the upper section of the TIREFIT sticker to the instrument cluster in a location where it will be easily seen by the driver.

! **NOTE** Staining caused by leaking tire sealant

After use, excess tire sealant may leak out from the filling hose.

▶ Therefore, place the filling hose in the plastic bag that contained the TIREFIT kit.

ENVIRONMENTAL NOTE Environmental pollution caused by environmentally irresponsible disposal

Tire sealant contains pollutants.

▶ Have the tire sealant bottle disposed of professionally, e.g. at an authorized Mercedes-Benz Center.

▶ Switch off the tire inflation compressor.

▶ Unscrew the filling hose from the valve of the faulty tire.

▶ Stow the tire sealant bottle, the tire inflation compressor and the warning triangle.

▶ **Pull away immediately.**

▶ Stop driving after approximately ten minutes and check the tire pressure using the tire inflation compressor.
The tire pressure must now be at least 130 kPa (1.3 bar/19 psi).

⚠ **WARNING** Risk of accident due to the specified tire pressure not being reached

If the specified tire pressure is not reached after a brief drive, the tire is too badly damaged. The tire sealant cannot repair the tire in this instance.

Damaged tires and tire pressure that is too low can significantly impair the braking properties and the handling characteristics.

▶ Do not continue driving.

▶ Consult a qualified specialist workshop.

In cases such as the one mentioned above, contact an authorized Mercedes-Benz Center. Or call 1-800-FOR-MERCedes (in the USA) or 1-800-387-0100 (in Canada).

▶ Correct the tire pressure if it is still at least 130 kPa (1.3 bar/19 psi). You will find the values in the Tire and Loading Information placard on the B-pillar on the driver's side or in the tire pressure table in the fuel filler flap.

▶ **To increase the tire pressure:** switch on the tire inflation compressor.

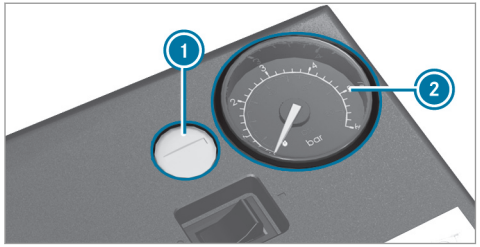

▶ **To reduce the tire pressure:** press pressure release button ① next to manometer ②.

▶ When the tire pressure is correct, unscrew the filling hose from the valve of the sealed tire.

▶ Screw the valve cap onto the valve of the sealed tire.

▶ Pull the tire sealant bottle out of the tire inflation compressor.
The filling hose stays on the tire sealant bottle.

▶ Drive to the nearest qualified specialist workshop and have the tire, tire sealant bottle and filling hose replaced there.

Battery (vehicle)

Notes on the 12 V battery

⚠ **WARNING** Risk of an accident due to work carried out incorrectly on the battery

Work carried out incorrectly on the battery can, for example, lead to a short circuit. This can lead to function restrictions in safety-relevant systems, for example the lighting system, ABS (anti-lock braking system) or ESP® (Electronic Stability Program). The operating safety of your vehicle may be restricted.

You could lose control of the vehicle in the following situations:

- when braking
- in the event of abrupt steering maneuvers and/or when the vehicle's speed is not adapted to the road conditions

▶ In the event of a short circuit or a similar incident, contact a qualified specialist workshop immediately.

- ▶ Do not continue driving.
- ▶ Always have work on the battery carried out at a qualified specialist workshop.

- Further information on ABS (→ page 201)
- Further information on ESP® (→ page 202)

For safety reasons, Mercedes-Benz recommends that you only use batteries which have been tested and approved for your vehicle by Mercedes-Benz. These batteries provide increased impact protection to prevent vehicle occupants from suffering acid burns should the battery be damaged in the event of an accident.

All vehicles except vehicles with a lithium-ion battery

⚠ **WARNING** Risk of explosion due to electrostatic charge

Electrostatic charge can cause sparks which may ignite the highly flammable gas mixture in the battery.

- ▶ To discharge any electrostatic charge that may have built up, touch the metal vehicle body before handling the battery.

The highly flammable gas mixture is created while the battery is charging and during starting assistance.

⚠ **WARNING** Danger of chemical burns from the battery acid

Battery acid is caustic.

- ▶ Avoid contact with the skin, eyes or clothing.
- ▶ Do not lean over the battery.
- ▶ Do not inhale battery gases.
- ▶ Keep children away from the battery.
- ▶ Immediately rinse battery acid off thoroughly with plenty of clean water and seek medical attention immediately.

All vehicles

ENVIRONMENTAL NOTE Environmental damage caused by improper disposal of batteries

Batteries contain pollutants. It is illegal to dispose of them with the household rubbish.

- ▶ Dispose of batteries in an environmentally responsible manner. Take discharged batteries to a qualified specialist workshop or to a collection point for used batteries.

If you have to disconnect the 12 V battery, contact a qualified specialist workshop.

Comply with safety notes and take protective measures when handling batteries.

Risk of explosion.

Fire, open flames and smoking are prohibited when handling the battery. Avoid creating sparks.

Electrolyte or battery acid is corrosive. Avoid contact with the skin, eyes or clothing. Wear suitable protective clothing, in particular gloves, an apron and a face mask. Immediately rinse electrolyte or acid splashes off with clean water. Consult a doctor if necessary.

Wear safety glasses.

Keep children away.

Observe this Operator's Manual.

Observe the following if you do not intend to use the vehicle over an extended period of time:

- Activate standby mode.
- Alternatively: connect the battery to a battery charger approved by Mercedes-Benz or consult a qualified specialist workshop to disconnect the battery.

Notes on starting assistance and on charging the 12 V battery

Vehicles with a lithium-ion battery

When charging the battery and during starting assistance, always use the jump-start connection point in the engine compartment.

! NOTE Damaging the battery through overvoltage

When charging using a battery charger without a maximum charging voltage, the battery or the vehicle electronics may be damaged.

▶ Only use battery chargers with a maximum charging voltage of 14.8 V.

All other vehicles

When charging the battery and during starting assistance, always use the jump-start connection point in the engine compartment.

! NOTE Damaging the battery through overvoltage

When charging using a battery charger without a maximum charging voltage, the battery or the vehicle electronics may be damaged.

▶ Only use battery chargers with a maximum charging voltage of 14.8 V.

WARNING Risk of explosion from hydrogen gas igniting

A battery generates hydrogen gas during the charging process. If there is a short circuit or sparks start to form, there is a danger of the hydrogen gas igniting.

- Make sure that the positive terminal of the connected battery does not come into contact with vehicle parts.
- Never place metal objects or tools on a battery.
- When connecting and disconnecting the battery, you must observe the described order for the battery clamps.
- When giving starting assistance, always make sure that you only connect battery terminals with identical polarity.
- During starting assistance, you must observe the described order for connecting and disconnecting the jumper cables.
- Do not connect or disconnect the battery clamps while the engine is running.

WARNING Risk of explosion during charging process and starting assistance

During the charging process and starting assistance, the battery may release an explosive gas mixture.

- Avoid fire, open flames, creating sparks and smoking.
- Make sure that there is sufficient ventilation during the charging process and during starting assistance.
- Do not lean over a battery.

WARNING Risk of explosion from a frozen battery

A discharged battery may freeze at temperatures slightly above or below freezing point.

During starting assistance or battery charging, battery gas may be released.

- Always thaw a frozen battery out first before charging it or performing starting assistance.

If the indicator/warning lamps in the instrument cluster do not light up at low temperatures, it is very likely that the discharged battery has frozen. In this case you may neither jump-start the vehicle nor charge the battery.

The service life of a battery that has been thawed may be dramatically shortened. The starting characteristics may be impaired, especially at low temperatures.

It is recommended that you have a thawed battery checked at a qualified specialist workshop.

Plug-in hybrid: be sure to observe the notes in the Supplement. Otherwise, you may fail to recognize dangers.

All vehicles

NOTE Damage caused by numerous or extended attempts to start the engine

Numerous or extended attempts to start the engine may damage the catalytic converter due to non-combusted fuel.

- Avoid numerous and extended attempts to start the engine.

Observe the following points during starting assistance and when charging the battery:

- Only use undamaged jumper cables/charging cables with a sufficient cross-section and insulated terminal clamps.
- Non-insulated parts of the terminal clamps must not come into contact with other metal parts while the jumper cable/charging cable is connected to the battery/jump-start connection point.
- The jumper cable/charging cable must not come into contact with any parts which may move when the engine is running.
- Always make sure that neither you nor the battery is electrostatically charged.
- Keep away from fire and open flames.
- Do not lean over the battery.

Observe the additional following points when charging the battery:

- Only use battery chargers tested and approved for Mercedes-Benz.
- Read the battery charger's operating instructions before charging the battery.

Observe the additional following points during starting assistance:

- Starting assistance may be performed using only batteries with a nominal voltage of 12 V.
- The vehicles must not touch.
- **Vehicles with a gasoline engine:** Jump-start the vehicle only when the engine and exhaust system are cold.

Starting assistance and charging the 12 V battery

Requirements:

- The vehicle is secured with the electric parking brake.
- The transmission is in position P.
- The ignition and all electrical consumers are switched off.
- The hood is open.

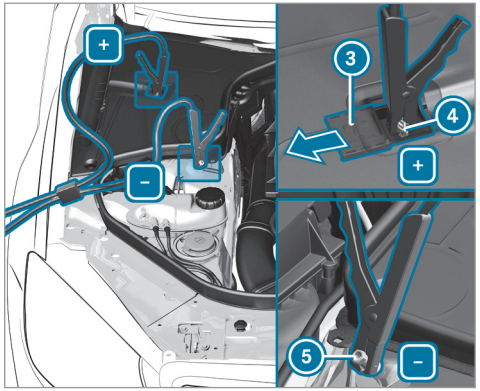

▶ Slide cover 3 of positive clamp 4 on the jump-starting connection point in the direction of the arrow.

▶ Connect positive clamp 4 on your vehicle to the positive pole of the donor battery using the jumper cable/charging cable. Always begin with positive clamp 4 on your own vehicle first.

- **During starting assistance:** start the engine of the donor vehicle and run at idle speed.
- Connect the negative pole of the donor battery and ground point ⑤ of your own vehicle by using the jumper cable/charging cable. Begin with the donor battery first.
- **During starting assistance:** start the engine of your own vehicle.
- **During the charging process:** start the charging process.
- **During starting assistance:** let the engines run for several minutes.
- **During starting assistance:** before disconnecting the jumper cable, switch on an electrical consumer in your own vehicle, e.g. the rear window defroster or lighting.

When the starting assistance/charging process is complete:

- First, remove the jumper cable/charging cable from ground point ⑤ and negative pole of the donor battery, then from positive clamp ④ and positive pole of the donor battery. Begin each time with the contacts on your own vehicle first.
- After removing the jumper cable/charging cable, close cover ③ of positive clamp ④.

Further information can be obtained at a qualified specialist workshop.

Replacing the 12 V battery

- Observe the notes on the 12 V battery (→ page 431).

Mercedes-Benz recommends that you have the 12 V battery replaced at a qualified specialist workshop, e.g. at an authorized Mercedes-Benz Center.

Observe the following notes if you want to replace the battery yourself:

- Always replace a faulty battery with a battery which meets the specific vehicle requirements.

  The vehicle is equipped with an AGM technology battery (Absorbent Glass Mat) or a lithium-ion battery. Full vehicle functionality is only guaranteed with an AGM battery or lithium-ion battery. For safety reasons, Mercedes-Benz recommends that you only use batteries which have been tested and approved for your vehicle by Mercedes-Benz.
- Carry over detachable parts, such as vent hoses, elbow fitting or terminal covers from the battery being replaced.
- Make sure that the vent hose is always connected to the original opening on the side of the battery.

  Install any existing or supplied cell caps.

  Otherwise, gases or battery acid could escape.
- Make sure that detachable parts are reconnected in the same way.

Tow starting or towing away

Permitted towing methods

Plug-in hybrid: observe the notes in the Supplement. Otherwise, you may fail to recognize dangers.

Mercedes-Benz recommends transporting your vehicle in the case of a breakdown, rather than towing it away.

For towing, use a tow rope or tow bar with both axles on the ground. Do not use tow bar systems (→ page 262).

NOTE Damage to the vehicle due to towing away incorrectly

▶ Observe the instructions and notes on towing away.

Towing with a raised axle: towing should be performed by a towing company.

Permitted towing methods

Vehicle equipment/towing method	**Both axles on the ground**	**Front axle raised**	**Rear axle raised**
Vehicles with automatic transmission	Yes, maximum 31 miles (50 km) at 31 mph (50 km/h)	No	Yes, if the steering wheel is fixed in the center position with a steering wheel lock
4MATIC vehicles	Yes, maximum 31 miles (50 km) at 31 mph (50 km/h)	No	No

Towing the vehicle with both axles on the ground

▶ Observe the notes on the permitted towing methods (→ page 436).

▶ Make sure that the battery is connected and charged.

When the battery is discharged, the following actions cannot be performed:

- The engine cannot be started
- The electric parking brake cannot be released or applied
- The automatic transmission cannot be shifted to position N or P

ⓘ If the automatic transmission cannot be shifted to position N, or the multifunction display in the instrument cluster does not show anything, have the vehicle transported away (→ page 439). A towing vehicle with lifting equipment is required for vehicle transportation.

! NOTE Damage due to towing away at excessively high speeds or over long distances

The drivetrain could be damaged when towing at excessively high speeds or over long distances.

▶ A towing speed of 30 mph (50 km/h) must not be exceeded.

▶ A towing distance of 30 miles (50 km) must not be exceeded.

⚠ WARNING Risk of accident when towing a vehicle which is too heavy

If the vehicle being tow-started or towed away is heavier than the permissible gross mass of your vehicle, the following situations can occur:

- The towing eye may become detached.
- The vehicle/trailer combination may swerve or even overturn.

▶ If another vehicle is tow-started or towed away, its weight must not exceed the permissible gross mass of your own vehicle.

If a vehicle must be tow-started or towed away, its weight must not exceed the permissible gross mass of the towing vehicle.

▶ Information on the permissible gross mass of the vehicle can be found on the vehicle identification plate (→ page 480).

▶ Do not open the driver's door or front passenger door, otherwise the automatic transmission automatically shifts to position P.

▶ Install the towing eye (→ page 441).

▶ Fasten the tow bar.

! NOTE Damage due to incorrect connection of the tow bar

▶ Only connect the tow rope or tow bar to the towing eyes.

▶ Deactivate the automatic locking mechanism (→ page 71).

- Do not activate the HOLD function.
- Deactivate the tow-away alarm (→ page 94).
- Deactivate Active Brake Assist (→ page 209).
- Shift the automatic transmission to position N.
- Release the electric parking brake.

WARNING Risk of accident due to limited safety-related functions during the towing process

Safety-related functions are limited or no longer available in the following situations:

- the ignition is switched off.
- the brake system or power steering system is malfunctioning.
- the energy supply or the on-board electrical system is malfunctioning.

When your vehicle is then towed away, significantly more effort may be required to steer and brake than is normally required.

- Use a tow bar.
- Make sure that the steering wheel can move freely, before towing the vehicle away.

NOTE Damage due to excessive tractive power

If you pull away sharply, the tractive power may be too high and the vehicles could be damaged.

- Pull away slowly and smoothly.

Loading the vehicle for transport

- Observe the notes on towing away (→ page 438).
- Connect the tow bar to the towing eye to load the vehicle.
- Shift the automatic transmission to position N.

ⓘ The automatic transmission may be locked in position P in the event of damage to the electrics. To shift to N, provide the on-board electrical system with power (→ page 435).

- Load the vehicle onto the transporter.
- Shift the automatic transmission to position P.
- Use the electric parking brake to secure the vehicle against rolling away.
- Only secure the vehicle by the wheels.

Vehicles with ADS PLUS (Adaptive Damping System PLUS)

WARNING Risk of an accident when transporting vehicles with Adaptive Damping System PLUS

The reduced damping forces on the vehicle being transported can cause the vehicle/trailer combination to start to swing.

As a result, when transporting vehicles with the Adaptive Damping System PLUS, the vehicle/trailer combination may start to skid. Consequently, you could lose control of your vehicle.

▶ When transporting, ensure that:
- The vehicle has been loaded onto the transporter correctly
- The vehicle is secured at all four wheels with suitable tensioning straps
- The maximum permissible speed of 35 mph (60 km/h) is not exceeded when transporting

! **NOTE** Damage to the vehicle from securing it incorrectly

▶ After loading, the vehicle must be secured on all four wheels. Otherwise, the vehicle could be damaged.

▶ A minimum distance of 4 in (10 cm) upwards and 8 in (20 cm) downwards must be kept to the transport platform.

Transport level is not available for the following vehicles:
- Mercedes-AMG vehicles
- Vehicles with MAGIC BODY CONTROL

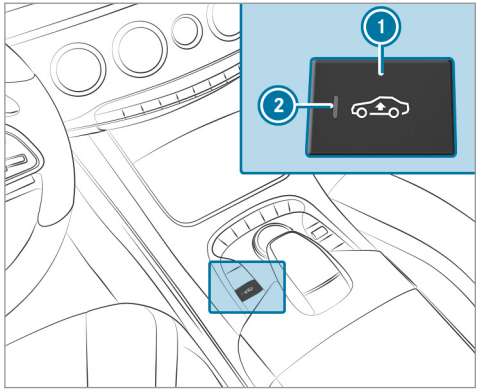

ⓘ Depending on the model, button ① is located in the control panel between the steering wheel and the driver's door.

▶ **To activate transport level:** press button ①.
Indicator lamp ② lights up.
The vehicle is raised by 1.2 in (30 mm) compared to the normal level.

▶ Press button ① again and hold it for at least five seconds.
The vehicle is raised from the raised level to the transport level.
The transport level is reached when indicator lamp ② flashes and the Max. Speed 22mph display message appears in the multifunction display.

The vehicle is lowered again in the following situations:
- When driving faster than 22 mph (35 km/h).
- After selecting a drive program using the DYNAMIC SELECT switch.
  The vehicle is then adjusted to the height of the last active drive program.

▶ Secure the vehicle on all four wheels after loading.

▶ **To deactivate transport level:** start the engine when the vehicle is at a standstill.
If transport level is activated, indicator lamp ② flashes.

- Press and hold button (1) for at least five seconds.
  The vehicle is adjusted to the height of the last active drive program. Indicator lamp (2) goes out.
- Drive the vehicle off the transporter.

4MATIC vehicles

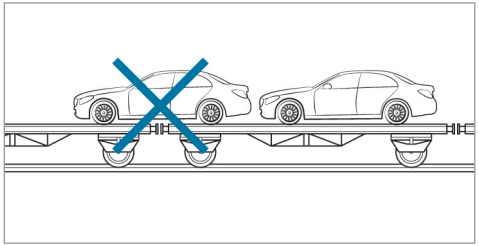

- Make sure that the front and rear axles come to rest on the same transportation vehicle.

NOTE Damage to the drivetrain due to incorrect positioning

- Do not position the vehicle above the connection point of the transport vehicle.

Towing eye storage location

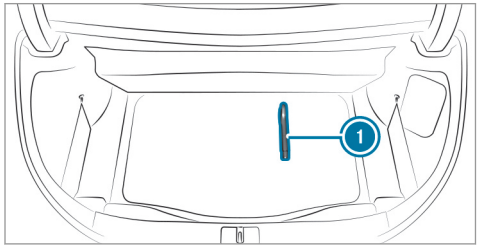

Towing eye (1) is located with the vehicle tool kit under the trunk floor.

Installing the towing eye

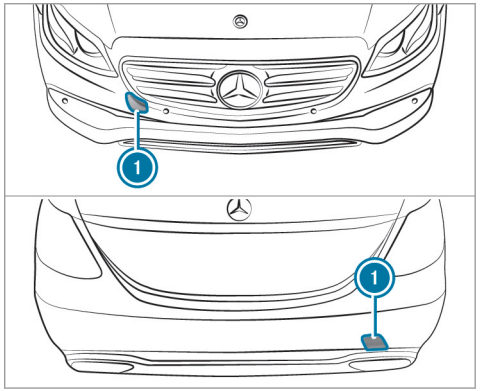

- Press the mark on cover (1) inwards and remove.
- Screw in the towing eye clockwise as far as it will go and tighten.

ⓘ Make sure that cover (1) engages in the bumper when you remove the towing eye.

NOTE Damage to the vehicle due to incorrect use of the towing eye

When a towing eye is used to recover a vehicle, the vehicle may be damaged in the process.

▶ Only use the towing eye to tow away or tow start the vehicle.

Tow-starting the vehicle (emergency engine start)

NOTE Damage to the automatic transmission due to tow starting

The automatic transmission may be damaged in the process of tow starting vehicles with automatic transmission.

▶ Vehicles with automatic transmission must not be tow started.

▶ Vehicles with automatic transmission must not be tow-started.

Electrical fuses

Notes on electrical fuses

WARNING Risk of accident and injury due to overloaded lines

If you manipulate or bridge a faulty fuse or if you replace it with a fuse with a higher amperage, the electric line could be overloaded.

This could result in a fire.

▶ Always replace faulty fuses with specified new fuses containing the correct amperage.

NOTE Damage due to incorrect fuses

Electrical components or systems may be damaged by incorrect fuses, or their functionality may be significantly impaired.

▶ Only use fuses that have been approved by Mercedes-Benz and which have the correct fuse rating.

Blown fuses must be replaced with fuses of the same rating, which you can recognize by the color and fuse rating. The fuse ratings and further information to be observed can be found in the fuse assignment diagram.

NOTE Damage or malfunctions caused by moisture

Moisture may cause damage to the electrical system or cause it to malfunction.

▶ When the fuse box is open, make sure that no moisture can enter the fuse box.

▶ When closing the fuse box, make sure that the seal of the lid is positioned correctly on the fuse box.

If the newly inserted fuse also blows, have the cause traced and rectified at a qualified specialist workshop.

Ensure the following before replacing a fuse:

- The vehicle is secured against rolling away.
- All electrical consumers are switched off.

- The ignition is switched off.

The electrical fuses are located in the following fuse boxes:

- Fuse box in the engine compartment on the driver's side (→ page 443)
- Fuse box on the driver's side of the cockpit (→ page 444)
- Fuse box in the front passenger footwell (→ page 444)
- Fuse box in the trunk on the right-hand side of the vehicle, when viewed in the direction of travel (→ page 445)

Opening and closing the fuse box in the engine compartment

Requirements:

- Observe the notes on electrical fuses (→ page 442).
- Have the following tools readily available:
  - A dry cloth
  - A screwdriver

Opening

⚠ **WARNING** Risk of injury from using the windshield wipers while the engine hood is open

When the engine hood is open and the windshield wipers are set in motion, you can be trapped by the wiper linkage.

▶ Always switch off the windshield wipers and ignition before opening the engine hood.

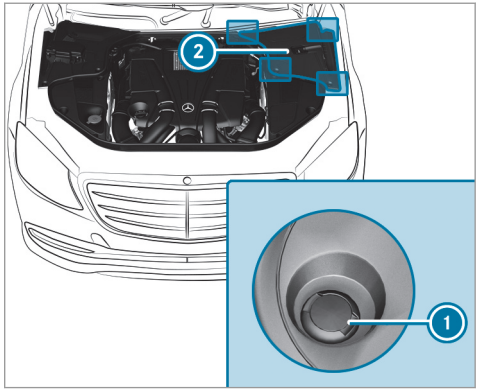

▶ Release retaining clips ①.
Pull cover ② up.

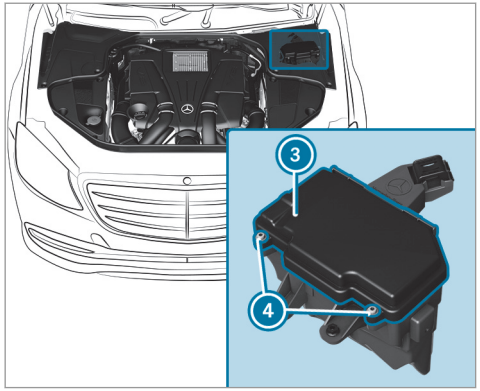

- Remove any existing moisture from the fuse box using a dry cloth.
- Loosen screws 4, and remove fuse box lid 3 from the top.

Closing

- Check whether the seal is positioned correctly in lid 3.
- Insert lid 3 into the bracket at the rear of the fuse box.
- Fold down lid 3 of the fuse box and tighten screws 4.
- Insert cover 2 on both sides and engage retaining clips 1.
- Close the hood.

Opening and closing the fuse box in the cockpit

Requirements:

- Observe the notes on electrical fuses (→ page 442).

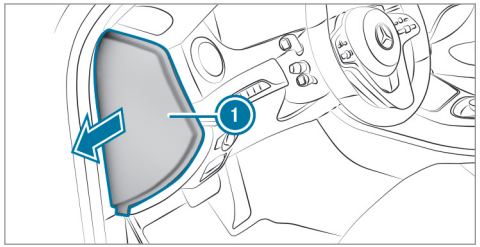

- Open cover 1 in the direction of the arrow and remove it.

Opening and closing the fuse box in the front passenger footwell

Requirements:

- Observe the notes on electrical fuses (→ page 442).

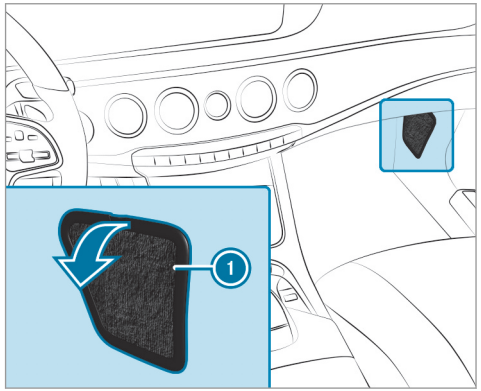

▶ Open cover ① in the direction of the arrow and remove it.

Opening and closing the fuse box in the trunk

Requirements:

- Observe the notes on electrical fuses (→ page 442).

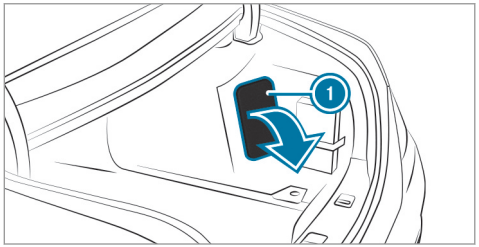

▶ Fold cover ① down in the direction of the arrow.

Notes on noise or unusual handling characteristics

While driving, pay attention to vibrations, noises and unusual handling characteristics, e.g. pulling to one side. This may indicate that the wheels or tires are damaged. If you suspect that a tire is defective, reduce your speed immediately. Stop the vehicle as soon as possible to check the wheels and tires for damage. Hidden tire damage could also be causing the unusual handling characteristics. If you find no signs of damage, have the tires and wheels checked at a qualified specialist workshop.

Notes on regularly inspecting wheels and tires

⚠ **WARNING** Risk of accident from damaged tires

Damaged tires can cause tire pressure loss.

As a result, you could lose control of your vehicle.

▶ Check the tires regularly for signs of damage and replace any damaged tires immediately.

⚠ **WARNING** Risk of aquaplaning due to insufficient tire tread

Insufficient tire tread will result in reduced tire grip. The tire tread is no longer able to dissipate water.

This means that in heavy rain or slush the risk of hydroplaning is increased, in particular if vehicle speed is not adapted to suit the conditions.

If the tire pressure is too high or too low, tires may exhibit different levels of wear at different locations on the tire contact surface.

▶ Thus, you should regularly check the tread depth and the condition of the tire contact surface across the entire width of all tires.

Minimum tread depth for:

- Summer tires: ⅛ in (3 mm)
- M+S tires: ⅙ in (4 mm)

▶ For safety reasons, replace the tires before the legally prescribed limit for the minimum tread depth is reached.

Carry out the following checks on all wheels regularly, at least once a month or as required, e.g. prior to a long journey or driving off-road:

- Check the tire pressure (→ page 448).
- Visually inspect wheels and tires for damage.
- Check the valve caps.

  The valves must be protected against moisture and dirt by the valve caps approved especially for your vehicle by Mercedes-Benz.
- Visual check of the tire tread depth and the tire contact surface across the entire width.

  The minimum tread depth for summer tires is ⅛ in (3 mm) and for winter tires ⅙ in (4 mm).

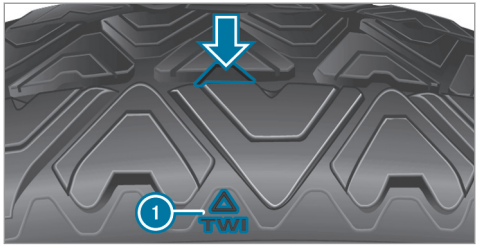

Six marks (1) show where the bar indicators (arrow) are integrated into the tire tread. They are visible once a tread depth of approximately 1/16 in (1.6 mm) has been reached.

Notes on snow chains

WARNING Risk of accident due to incorrect mounting of snow chains

If you have mounted snow chains to the front wheels, the snow chains may drag against the vehicle body or chassis components. This could cause damage to the vehicle or the tires.

- ▶ Never mount snow chains on the front wheels.
- ▶ Only mount snow chains on the rear wheels in pairs.

NOTE Damage to the wheel trim from mounted snow chains

If snow chains are mounted to steel wheels, the wheel trims can be damaged.

- ▶ Remove the wheel trims of steel wheels before mounting snow chains.

Observe the following when using the snow chains:

- Snow chains are only permissible for certain wheel/tire combinations. You can obtain information about this from an authorized Mercedes-Benz Center.
- For safety reasons, only use snow chains that have been specifically approved for your vehicle by Mercedes-Benz, or snow chains with the same quality standard.
- If snow chains are installed, the maximum permissible speed is 30 mph (50 km/h).
- **Vehicles with Active Parking Assist:** Do not use Parking Assist PARKTRONIC when snow chains have been installed.
- **Vehicles with AIR BODY CONTROL or MAGIC BODY CONTROL:** If snow chains are installed, only drive at raised vehicle level.

ⓘ You can deactivate ESP® to pull away (→ page 204). This allows the wheels to spin, achieving an increased driving force.

Tire pressure

Notes on tire pressure

⚠ **WARNING** Risk of accident due to insufficient or excessive tire pressure

Underinflated or overinflated tires pose the following risks:

- The tires may burst, especially as the load and vehicle speed increase.
- The tires may wear excessively and/or unevenly, which may greatly impair tire traction.
- The driving characteristics, as well as steering and braking, may be greatly impaired.

▶ Comply with the recommended tire pressure and check the tire pressure of all tires including the spare wheel regularly:

- at least once a month
- when the load changes
- before embarking on a longer journey
- if operating conditions change, e.g. off-road driving

▶ Adjust the tire pressure as necessary.

Tire pressure which is too high or too low can:

- Shorten the service life of the tires.
- Cause increased tire damage.
- Adversely affect driving characteristics and thus driving safety, e.g. due to hydroplaning.

⚠ **WARNING** Risk of an accident due to insufficient tire pressure

Tires with pressure that is too low can overheat and burst as a result.

In addition, they also suffer from excessive and/or irregular wear, which can significantly impair the braking properties and the handling characteristics.

▶ Avoid excessively low tire pressures in all the tires, including the spare wheel.

Tire pressure which is too low can cause:

- Tire faults as a result of overheating.
- Impaired handling characteristics.
- Irregular wear.
- Increased fuel consumption.

⚠ **WARNING** Risk of accident from excessive tire pressure

Tires with excessively high pressure can burst because they are damaged more easily by highway fill, pot holes etc.

In addition, they also suffer from irregular wear, which can significantly impair the braking properties and the handling characteristics.

▶ Avoid excessively high tire pressures in all the tires, including the spare wheel.

Tire pressure which is too high can cause:

- Increased braking distance
- Impaired handling characteristics
- Irregular wear

- Impaired driving comfort
- Susceptibility to damage

⚠ **WARNING** Risk of accident caused by repeated drop in tire pressure

If the tire pressure drops repeatedly, the wheel, valve or tire may be damaged.

Insufficient tire pressure can cause the tires to burst.

▶ Inspect the tire for signs of foreign objects.

▶ Check whether the wheel or valve has a leak.

▶ If you are unable to rectify the damage, contact a qualified specialist workshop.

You can find information on tire pressures for the vehicle's factory-installed tires on the following labels:

- Tire and Loading Information placard on the B-pillar of your vehicle (→ page 454).
- Tire pressure table on the inside of the fuel filler flap (→ page 449).

Observe the maximum tire pressure (→ page 461).

Use a suitable pressure gauge to check the tire pressure. The outer appearance of a tire does not permit any reliable conclusion about the tire pressure.

Vehicles with a tire pressure monitoring system: You can also check the tire pressure using the on-board computer.

Only correct tire pressures when the tires are cold. Conditions for cold tires:

- The vehicle has been parked with the tires out of direct sunlight for at least three hours.
- The vehicle has traveled less than 1 mile (1.6 km).

A rise in the tire temperature of 18 °F (10 °C) increases the tire pressure by approx. 10 kPa (0.1 bar/1.5 psi). Take this into account when checking the tire pressure of warm tires.

The tire pressure recommended for increased load/speed in the tire pressure table can affect the ride comfort.

⚠ **WARNING** Risk of accident due to unsuitable accessories on tire valve

If you mount unsuitable accessories onto tire valves, the tire valves may be overloaded and malfunction, which can cause a loss of tire pressure. Aftermarket tire pressure monitoring systems will cause the tire valve to remain open, depending on the design. This can also result in a loss of tire pressure.

▶ Only screw standard valve caps or valve caps specifically approved by Mercedes-Benz for your vehicle onto the tire valve.

Tire pressure table

The tire pressure table is on the inside of the fuel filler flap.

ⓘ The data shown in the images is example data.

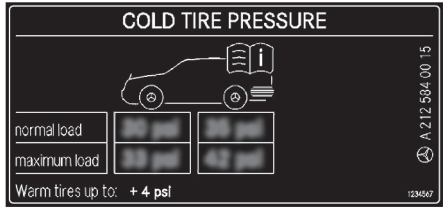

The tire pressure table shows the recommended tire pressures for all tires approved for this vehicle. The recommended tire pressures apply for cold tires under various operating conditions, i.e. loading and/or speed of the vehicle.

If one or more tire sizes precede a tire pressure, the tire pressure information following is only valid for those tire sizes.

The load conditions "partially laden" and "fully laden" are defined in the table for different numbers of passengers and amounts of luggage. The actual number of seats may differ from this.

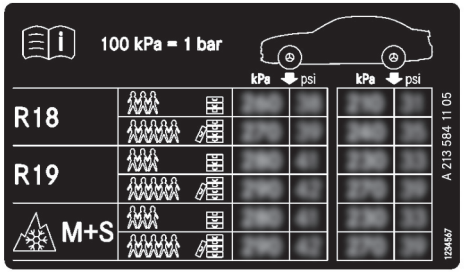

Some tire pressure tables only show the rim diameter instead of the complete tire size, e.g. **R18**. The rim diameter is part of the tire size and can be found on the tire side wall (→ page 462).

Be sure to also observe the following further related subjects:

- Notes on tire pressure (→ page 448)
- Tire and Loading Information placard (→ page 454)
- Maximum tire pressure (→ page 461)

Checking tire pressures manually

▶ Read the tire pressure for the current operating conditions from the Tire and Loading Information placard or the tire pressure table. Observe the notes on tire pressure.

▶ Remove the valve cap of the tire to be checked.

▶ Press the tire pressure gauge securely onto the valve.

▶ Read the tire pressure.

▶ If the tire pressure is lower than the recommended value, increase the tire pressure to the recommended value.

▶ If the tire pressure is higher than the recommended value, release air. To do so, press down the metal pin in the valve, e.g. using the tip of a pen for example. Then check the tire pressure again using the tire pressure gauge.

▶ Screw the valve cap onto the valve.

Further related subjects:

- Notes on tire pressure (→ page 448)
- Tire pressure table (→ page 449)
- Tire and Loading Information placard (→ page 454)

Tire pressure monitoring system

Function of the tire pressure monitoring system

DANGER Risk of accident due to incorrect tire pressure

Each tire, including the spare tire (if present), should be checked at least once a month when cold and then inflated to the pressure recommended by the vehicle manufacturer (see the Tire and Loading Information placard on the driver's side B-pillar or the tire pressure table on the inside of the fuel filler flap of your vehicle). If your vehicle has tires of a different size than the size indicated on the Tire and Loading Information placard or the tire pressure table, you must find out the correct tire pressures for these tires.

As an added safety feature, your vehicle has been equipped with a tire pressure monitoring system (TPMS) that illuminates a low tire pressure indicator lamp when one or more of your tires are significantly underinflated. Accordingly, if the low tire pressure indicator lamp lights up, you should stop and check your tires as soon as possible, and inflate them to the correct pressure. Driving on a significantly underinflated tire causes the tire to overheat and can lead to tire failure. Underinflation also increases fuel consumption, reduces the life expectancy of the tire and may adversely affect the handling and braking characteristics of the vehicle. Please note that the TPMS is not a substitute for proper tire maintenance, and it is the driver's responsibility to maintain correct tire pressure, even if underinflation has not reached the level to trigger illumination of the TPMS low tire pressure indicator lamp.

Your vehicle has also been equipped with a TPMS malfunction indicator to indicate when the system is not operating properly. The TPMS malfunction indicator is combined with the low tire pressure indicator lamp. When the system detects a malfunction, the indicator lamp will flash for approximately a minute and then remain continuously illuminated. This sequence will continue upon subsequent vehicle start-ups as long as the malfunction exists.

When the malfunction indicator is illuminated, the system may not be able to detect or signal low tire pressure as intended. TPMS malfunctions may occur for a variety of reasons, including the installation of incompatible replacement or alternate tires or wheels on the vehicle that prevent the TPMS from functioning properly.

Always check the TPMS malfunction warning lamp after replacing one or more tires or wheels on your vehicle to ensure that the replacement or alternate tires and wheels

allow the TPMS to continue to function properly.

The system checks the tire pressure and the tire temperature of the tires installed on the vehicle by means of a tire pressure sensor.

New tire pressure sensors, e.g. in winter tires, are automatically taught-in during the first journey they are used.

The tire pressure and the tire temperature appear in the multifunction display (→ page 452).

If there is a substantial pressure loss or if the tire temperature is excessive, you will be warned in the following ways:

- Via display messages (→ page 535)
- Via the warning lamp in the instrument cluster (→ page 554)

The tire pressure monitoring system is only an aid. It is the driver's responsibility to set the tire pressure to the recommended cold tire pressure suitable for the operating situation. Set the tire pressure for cold tires using a tire pressure gauge. Note that the correct tire pressure for the current operating situation must first be taught-in to the tire pressure monitoring system.

In most cases, the tire pressure monitoring system will automatically update the new reference values after you have changed the tire pressure. You can, however, also update the reference values by restarting the tire pressure monitoring system manually (→ page 453).

System limits

The system may be impaired or may not function in the following situations:

- The tire pressure has been set incorrectly
- There is a sudden pressure loss caused, for example, by a foreign object penetrating the tire
- There is a malfunction caused by another radio signal source

Be sure to also pay attention to the following related topic:

- Notes on tire pressure (→ page 448)

Checking the tire pressure with the tire pressure monitoring system

Requirements:

- The ignition is switched on.

On-board computer:

Service ▸▸ Tires

One of the following displays appears:

- Current tire pressure of each wheel:

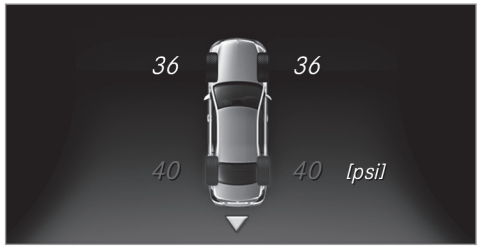

- Tire pressure will be displayed after driving a few minutes
- Tire Pressure Monitor Active: the teach-in process of the system is not yet complete.

The tire pressures are already being monitored.

▶ Compare the tire pressure with the recommended tire pressure for the current operating condition (→ page 449). Observe the notes on tire temperature (→ page 448).

ⓘ The values displayed in the multifunction display may deviate from those of the tire pressure gauge as they refer to sea level. At high altitudes, the tire pressure values indicated by a pressure gauge are higher than those shown by the on-board computer. In this case, do not reduce the tire pressure.

Make sure to observe the following further related subject:

- Notes on tire pressure (→ page 448)

Restarting the tire pressure monitoring system
Requirements:

- The recommended tire pressure is correctly set for the respective operating condition on each of the four wheels (→ page 448).

Restart the tire pressure monitoring system in the following situations:

- The tire pressure has changed.
- The wheels or tires have been changed or newly installed.

On-board computer:
→ Service ▸▸ Tires

▶ Swipe downwards on Touch Control on the left-hand side of the steering wheel.
The Use Current Pressures as New Reference Values? message is shown in the multifunction display.

▶ Press OK to confirm the restart.
The Run Flat Indicator Restarted message is shown in the multifunction display.

Current warning messages are deleted and the (!) yellow warning lamp goes out.

After you have driven for a few minutes, the system checks whether the current tire pressures are within the specified range. The current tire pressures are then accepted as reference values and monitored.

Make sure to observe the following further related subject:

- Notes on tire pressure (→ page 448)

Radio-equipment approval of the tire pressure monitoring system

Radio equipment approval numbers

Country	Radio type approval number
Canada	IC: 2546A-GG4T IC: 2546A-DG6W2D4 IC: 2546A-MC34MA4 Le présent appareil est conforme aux CNR d'Industrie Canada applicables aux appareils radio exempts de licence. L'exploitation est autorisée aux deux conditions suivantes: (1) l'appareil ne doit pas produire de brouillage, et (2) l'utilisateur de l'appareil doit accepter tout brouillage radioélectrique subi, même si le brouillage est susceptible d'en compromettre le fonctionnement.
USA	FCC ID: MRXGG4T FCC ID: MRXDG6W2D4 FCC ID: MRXMC34MA4 This device complies with Part 15 of the FCC Rules. Operation is subject to the following two conditions: (1) This device may not cause harmful interference, and (2) This device must accept any interference received, including interference that may cause undesired operation.

Loading the vehicle

Notes on Tire and Loading Information placard

WARNING Risk of accident from overloaded tires

Overloaded tires may overheat and burst as a consequence. Overloaded tires can also impair the steering and handling characteristics and lead to brake failure.

- ▶ Observe the load-bearing capacity of the tires.
- ▶ The load-bearing capacity must be at least half the gross axle weight rating of the vehicle.
- ▶ Never overload the tires by exceeding the maximum load.

The Tire and Loading Information placard is on the B-pillar on the driver's side of the vehicle.

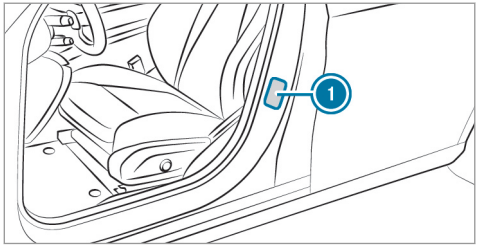

1 Tire and Loading Information placard

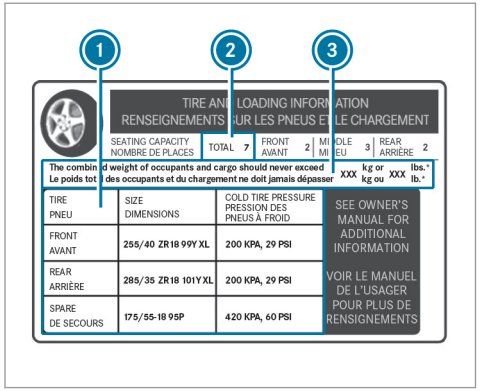

ⓘ The data shown in the illustration is example data.

The Tire and Loading Information placard shows:

- Maximum number of seats 2 according to the maximum number of people permitted to travel in the vehicle.
- Maximum permissible load 3 comprises the gross weight of all vehicle occupants, load and luggage.
- Recommended tire pressures 1 for cold tires. The recommended tire pressures are valid for the maximum permissible load and up to the maximum permissible vehicle speed.

Please also note:

- Information on permissible weights and loads on the vehicle identification plate (→ page 480).
- Information on tire pressure in the tire pressure table (→ page 449).

Further related subjects:

- Determining the maximum permissible load (→ page 455)
- Notes on tire pressure (→ page 448).

Steps for Determining Correct Load Limit

The following steps have been developed as required of all manufacturers under Title 49, Code of U.S. Federal Regulations, Part 575, pursuant to the "National Traffic and Motor Vehicle Safety Act of 1966".

- **(1):** Locate the statement "The combined weight of occupants and cargo should never exceed XXX kg or XXX lbs." on your vehicle's placard.
- **(2):** Determine the combined weight of the driver and passengers that will be riding in your vehicle.
- **(3):** Subtract the combined weight of the driver and passengers from XXX kg or XXX lbs.
- **(4):** The resulting figure equals the available amount of cargo and luggage load capacity. For example, if the "XXX" amount equals 1400 lbs. and there will be five 150 lb passengers in your vehicle, the amount of available cargo and luggage load capacity is 650 lbs. (1400 - 750 (5 x 150) = 650 lbs.)
- **(5):** Determine the combined weight of luggage and cargo being loaded on the vehicle. The weight may not safely exceed the available cargo and luggage load capacity calculated in Step 4.
- **(6):** If your vehicle will be towing a trailer, load from your trailer will be transferred to your vehicle. Consult this manual to determine how this reduces the available cargo and luggage load capacity of your vehicle.

ⓘ Not all vehicles are permitted to tow a trailer. Towing a trailer is only permitted if a trailer-hitch is installed. Please consult an authorized Mercedes-Benz dealer if you have any questions about towing a trailer with your vehicle.

Even if you have calculated the total load carefully, you should still make sure that the maximum permissible gross weight and the maximum gross axle weight rating of your vehicle are not exceeded. Details can be found on the vehicle identification plate.

- Have your loaded vehicle – including driver, occupants and load – weighed on a vehicle weighbridge.
  The measured values may not exceed the maximum permissible values stated on the vehicle identification plate.

Further related subjects:

- Calculation example for determining the maximum load (→ page 456)
- Tire and Loading Information placard (→ page 454)
- Tire pressure table (→ page 449)
- Vehicle identification plate

Calculation example for determining the maximum load

The following table shows examples of how to calculate total and load capacities with varying seating configurations and different numbers and sizes of occupants. The following examples use a maximum load of 1500 lbs (680 kg). **This is for illustration purposes only.** Make sure you are using the actual load limit for your vehicle stated on your vehicle's Tire and Loading Information placard (→ page 454).

The higher the weight of all the occupants, the smaller the maximum load for luggage.

Step 1

	Example 1	Example 2
Combined maximum weight of occupants and load (data from the Tire and Loading Information placard)	1500 lbs (680 kg)	1500 lbs (680 kg)

Step 2

	Example 1	Example 2
Number of people in the vehicle (driver and occupants)	5	1
Distribution of the occupants	Front: 2 Rear: 3	Front: 1
Weight of occupants	Occupant 1: 150 lbs (68 kg) Occupant 2: 180 lbs (82 kg) Occupant 3: 160 lbs (73 kg) Occupant 4: 140 lbs (63 kg) Occupant 5: 120 lbs (54 kg)	Occupant 1: 200 lbs (91 kg)
Total weight of all occupants	750 lbs (340 kg)	200 lbs (91 kg)

Step 3

	Example 1	Example 2
Permissible load (maximum gross vehicle weight rating from the Tire and Loading Information placard minus the gross weight of all occupants)	1500 lbs (680 kg) - 750 lbs (340 kg) = 750 lbs (340 kg)	1500 lbs (680 kg) - 200 lbs (91 kg) = 1300 lbs (589 kg)

Tire labeling

Overview of tire labeling

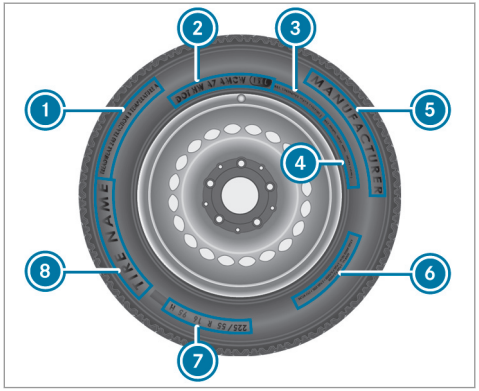

1. Uniform Tire Quality Grading Standard (→ page 459)
2. DOT, Tire Identification Number (→ page 460)
3. Maximum tire load (→ page 461)
4. Maximum tire pressure (→ page 461)
5. Manufacturer
6. Characteristics of the tire (→ page 462)
7. Tire size designation, load-bearing capacity, speed rating and load index (→ page 462)
8. Tire name

ⓘ The data shown in the image is example data.

Tire Quality Grading

In accordance with the US Department of Transportation's "Uniform Tire Quality Grading Standards", tire manufacturers are required to grade their tires on the basis of the following three performance factors:

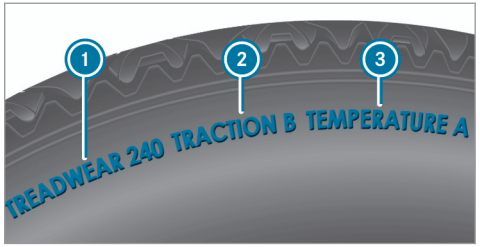

1. Tread wear grade
2. Traction grade
3. Temperature grade

ⓘ The data shown in the illustration is example data.

ⓘ The classification is not legally stipulated for Canada, but it is generally stated.

Tread wear grade
The tread wear grade is a comparative rating based on the wear rate of the tire when tested under controlled conditions on a specified test track of the US Department of Transportation. For example, a tire graded 150 would wear one

and one-half times as well on the government test track as a tire graded 100.

The relative performance of tires depends upon the actual conditions of their use, however, and may depart significantly from the norm due to variations in driving habits, service practices and differences in road characteristics and climate conditions.

Traction grade

⚠ **DANGER** Risk of accident due to inadequate traction

The traction grade assigned to this tire is based on straight-ahead braking traction tests, and does not include either acceleration, cornering, hydroplaning or peak traction characteristics.

▶ Always adapt your driving style and drive at a speed to suit the prevailing traffic and weather conditions.

! **NOTE** Damage to the drivetrain from wheelspin

▶ Avoid wheelspin.

The traction classes, from highest to lowest, are AA, A, B and C. Those grades represent the tire's ability to stop on wet pavement as measured under controlled conditions on specified government test surfaces of asphalt and concrete. A tire marked C may have poor traction performance.

Temperature grade

⚠ **WARNING** Risk of accident from tire overheating and tire failure

The temperature grade for this tire is established for a tire that is properly inflated and not overloaded. Excessive speed, underinflation, or excessive loading, either separately or in combination, can cause excessive heat build-up and possible tire failure.

▶ Observe the recommended tire pressures and regularly check the tire pressure of all tires including the spare wheel.

▶ Adjust the tire pressure as necessary.

The temperature grades are A (the highest), B and C. They represent the tire's resistance to the generation of heat and its ability to dissipate heat when tested under controlled conditions on a specified indoor laboratory test wheel. Sustained high temperature can cause the material of the tire to degenerate and reduce tire life, and excessive temperature can lead to sudden tire failure. Grade C corresponds to a level of performance which all passenger car tires must meet under the Federal Motor Safety Standard No. 109. Grades B and A represent higher levels of performance on the laboratory test wheel than the minimum required by law.

DOT, Tire Identification Number (TIN)

US tire regulations stipulate that every tire manufacturer or retreader must imprint a TIN in or on the side wall of each tire produced.

ⓘ The data shown in the image is example data.

The TIN is a unique identification number to identify tires and comprises the following:

- **DOT (Department of Transportation):** tire symbol marks ① indicating that the tire complies with the requirements of the US Department of Transportation.
- **Manufacturer identification code:** manufacturer identification code ② contains details of the tire manufacturer. New tires have a code with two symbols. Retreaded tires have a code with four symbols. Further information on retreaded tires (→ page 467).
- **Tire size:** identifier ③ describes the tire size.
- **Tire type code:** tire type code ④ can be used by the manufacturer as a code to describe specific characteristics of the tire.
- **Manufacturing date:** manufacturing date ⑤ provides information about the age of a tire. The 1st and 2nd positions represent the calendar week and the 3rd and 4th positions state the year of manufacture (e.g. "3208" represents the 32nd week of 2008).

Information on the maximum tire load

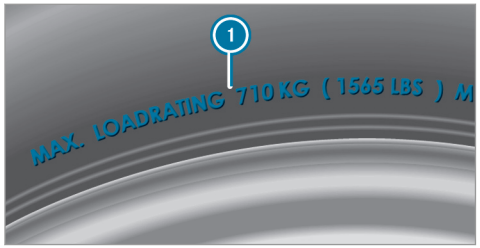

ⓘ The data shown in the image is example data.

Maximum tire load ① is the maximum permissible weight for which the tire is approved.

Do not overload the tires by exceeding the specified load limit. The maximum permissible load can be found on the vehicle's Tire and Loading Information placard on the B-pillar on the driver's side (→ page 454).

Specifications for maximum tire pressure

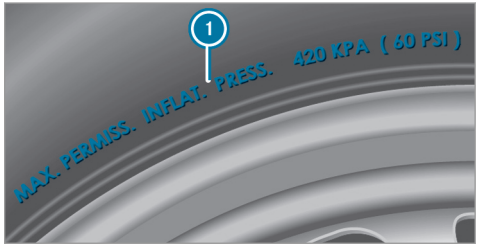

ⓘ The data shown in the image is example data.

Never exceed maximum tire pressure ① specified for the tire.

Information on tire characteristics

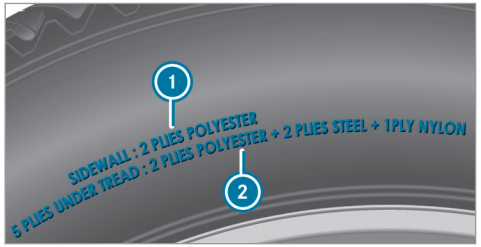

ⓘ The data shown in the image is example data.

This information describes the type of tire cord and the number of layers in side wall ① and under tire tread ②.

Tire size designation, load-bearing capacity, speed rating and load index

⚠ **WARNING** Risk of injury through exceeding the specified tire load rating or the permissible speed rating

Exceeding the specified tire load rating or the permissible speed rating may lead to tire damage and to the tires bursting.

▶ Therefore, only use tire types and sizes approved for your vehicle model.

▶ Observe the tire load rating and speed rating required for your vehicle.

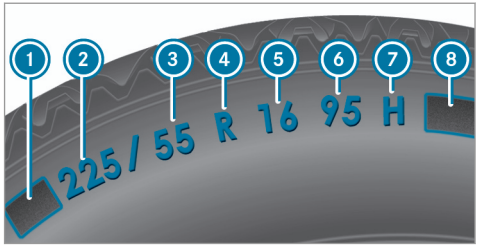

① Preceding letter
② Nominal tire width in millimeters
③ Aspect ratio in %
④ Tire code
⑤ Rim diameter
⑥ Load-bearing index
⑦ Speed rating
⑧ Load index

ⓘ The data shown in the image is example data.

Information about reading tire data can be obtained from any qualified specialist workshop.

Preceding letter (1):

- Without: passenger vehicle tires according to European manufacturing standards.
- "P": passenger vehicle tires according to US manufacturing standards.
- "LT": light truck tires according to US manufacturing standards.
- "T": compact emergency spare wheels with high tire pressure that are only designed for temporary use in an emergency.

Aspect ratio (3):
Ratio between tire height and tire width in percent (tire height divided by tire width).

Tire code (4) (tire type):

- "R" radial tire
- "D": bias ply tire
- "B": bias belted tires
- "ZR": radial tire with a maximum speed above 149 mph (240 km/h) (optional)

Rim diameter (5):
The diameter of the bead seat (not the diameter of the rim flange). The rim diameter is specified in inches (in).

Load-bearing index (6):
Numerical code that specifies the maximum load-bearing capacity of a tire (e.g. "91" corresponds to 1356 lbs (615 kg)).

The load-bearing capacity of the tire must be at least half the permissible axle load of your vehicle. Do not overload the tires by exceeding the specified load limit.

See also:

- Maximum permissible load on the Tire and Loading Information placard (→ page 454)
- Maximum tire load (→ page 461)
- Load index

Speed rating (7):
Specifies the approved maximum speed of the tire.

ⓘ An electronic speed limiter prevents your vehicle from exceeding a speed of 130 mph (210 km/h).

Make sure that your tires have the required speed rating. You can obtain information on the required speed rating from an authorized Mercedes-Benz Center.

Summer tires

Index	Speed rating
Q	up to 100 mph (160 km/h)
R	up to 106 mph (170 km/h)
S	up to 112 mph (180 km/h)
T	up to 118 mph (190 km/h)
H	up to 130 mph (210 km/h)
V	up to 149 mph (240 km/h)
W	up to 168 mph (270 km/h)
Y	up to 186 mph (300 km/h)

Index	Speed rating
ZR...Y[1]	up to 186 mph (300 km/h)
ZR...(..Y)[1]	over 186 mph (300 km/h)
ZR[1]	over 149 mph (240 km/h)

- Specifying the speed rating as the "ZR" index in tire code 4 is optional for tires up to 186 mph (300 km/h).
- If your tire code 4 includes "ZR" and there is no speed rating 7, find out what the maximum speed is from the tire manufacturer.
- If load-bearing index 6 and speed rating 7 are in brackets, the maximum speed rating of your tire is above 186 mph (300 km/h). To find out the maximum speed, ask the tire manufacturer.

All-weather tires and winter tires

Index	Speed rating
Q M+S[2]	up to 100 mph (160 km/h)
T M+S[2]	up to 118 mph (190 km/h)
H M+S[2]	up to 130 mph (210 km/h)
V M+S[2]	up to 149 mph (240 km/h)

Winter tires bear the snowflake symbol and fulfill the requirements of the Rubber Manufacturers Association (RMA) and the Rubber Association of Canada (RAC) regarding the tire traction on snow.

Load index 8:

- No specification given: standard load (SL) tire
- "XL" or "Extra Load": extra load tire or reinforced tire
- "Light Load": light load tire
- "C", "D", "E": a load range that depends on the maximum load that the tire can carry at a certain pressure

Definition of terms for tires and loading

Tire structure and characteristics: describes the number of layers or the number of rubber-coated belts in the tire contact surface and the tire wall. These are made of steel, nylon, polyester and other materials.

Bar: metric unit for tire pressure.
14.5038 pounds per square inch (psi) and 100 kilopascal (kPa) is the equivalent of one bar.

DOT (Department of Transportation): DOT-marked tires fulfill the requirements of the US Department of Transportation.

Average weight of the vehicle occupants: the number of vehicle occupants for which the vehicle is designed, multiplied by 150 lb (68 kg).

1 "ZR" stated in the tire code.
2 Or "M+S " for winter tires

Uniform Tire Quality Grading Standards: a uniform standard to grade the quality of tires with regard to tread quality, tire traction and temperature characteristics. The quality grading assessment is made by the manufacturer following specifications from the U.S. government. The quality grade of a tire is imprinted on the side wall of the tire.

Recommended tire pressure: the recommended tire pressure is the tire pressure specified for the tires mounted to the vehicle at the factory.

The tire and information table contains the recommended tire pressures for cold tires, the maximum permissible load and the maximum permissible vehicle speed.

The tire pressure table contains the recommended tire pressures for cold tires under various operating conditions, i.e. loading and/or speed of the vehicle.

Increased vehicle weight due to optional equipment: the combined weight of all standard and optional equipment available for the vehicle, regardless of whether it is actually installed on the vehicle or not.

Rim: the part of the wheel on which the tire is installed.

GAWR (Gross Axle Weight Rating): the GAWR is the maximum permissible axle load. The actual load on an axle must never exceed the gross axle weight rating. The gross axle weight rating can be found on the vehicle identification plate on the B-pillar on the driver's side.

Speed rating: the speed rating is part of the tire identification. It specifies the speed range for which a tire is approved.

GVW (Gross Vehicle Weight): the gross vehicle weight comprises the weight of the vehicle including fuel, tools, the spare wheel, accessories installed, occupants, luggage and the trailer drawbar noseweight, if applicable. The gross vehicle weight must not exceed the gross vehicle weight rating GVWR as specified on the vehicle identification plate on the B-pillar on the driver's side.

GVWR (Gross Vehicle Weight Rating): the GVWR is the maximum permitted gross weight of the fully laden vehicle (weight of the vehicle including all accessories, occupants, fuel, luggage and the trailer drawbar noseweight if applicable). The gross vehicle weight rating is specified on the vehicle identification plate on the B-pillar on the driver's side.

Maximum weight of the laden vehicle: the maximum weight is the sum of the curb weight of the vehicle, the weight of the accessories, the maximum load and the weight of optional equipment installed at the factory.

Kilopascal (kPa): metric unit for tire pressure. 6.9 kPa corresponds to 1 psi. Another unit for tire pressure is bar. 100 kilopascal (kPa) equals 1 bar.

Load index: in addition to the load-bearing index, the load index may also be imprinted on the side wall of the tire. This specifies the load-bearing capacity of the tire more precisely.

Curb weight: the weight of a vehicle with standard equipment including the maximum capacity of fuel, oil and coolant. It also includes the air conditioning system and optional equipment if

these are installed on the vehicle, but does not include passengers or luggage.

Maximum tire load: the maximum tire load is the maximum permissible weight in kilograms or lbs for which a tire is approved.

Maximum permissible tire pressure: maximum permissible tire pressure for one tire.

Maximum load on one tire: maximum load on one tire. This is calculated by dividing the maximum axle load of one axle by two.

PSI (pounds per square inch): standard unit of measurement for tire pressure.

Aspect ratio: ratio between tire height and tire width in percent.

Tire pressure: pressure inside the tire applying an outward force to every square inch of the tire. The tire pressure is specified in pounds per square inch (psi), in kilopascals (kPa) or in bar. The tire pressure should only be corrected when the tires are cold.

Cold tire pressure: the tires are cold when the vehicle has been parked for at least 3 hours without direct sunlight on the tires or the vehicle has been driven for less than 1 mile (1.6 km).

Tire contact surface: the part of the tire that comes into contact with the road.

Tire bead: the purpose of the tire bead is to ensure that the tire sits securely on the wheel rim. There are several wire cores in the tire bead to prevent the tire from changing length on the wheel rim.

Side wall: the part of the tire between the tread and the tire bead.

Weight of optional equipment: the combined weight of the optional equipment weighing more than the replaced standard parts and more than 5 lbs (2.3 kg). This optional equipment, such as high-performance brakes, level control system, a roof luggage rack or high-performance batteries, is not included in the curb weight and the weight of the accessories.

TIN (Tire Identification Number): a unique identification number which can be used by a tire manufacturer to identify tires, for example, in a product recall, and thus identify the purchasers. The TIN is made up of the manufacturer's identity code, tire size, tire type code and the manufacturing date.

Load-bearing index: the load-bearing index is a code that contains the maximum load-bearing capacity of a tire.

Traction: traction is the grip resulting from friction between the tires and the road surface.

Wear indicator: narrow bars (tread wear bars) that are distributed over the tire contact surface. If the tire tread is level with the bars, the wear limit of 1/16 in (1.6 mm) has been reached.

Distribution of vehicle occupants: distribution of vehicle occupants over designated seat positions in a vehicle.

Maximum permissible payload weight: nominal load and luggage load plus 150 lb (68 kg) multiplied by the number of seats in the vehicle.

Changing a wheel

Notes on selecting, installing and replacing tires

Mercedes-AMG vehicles: observe the notes in the Supplement. Otherwise, you may fail to recognize dangers.

You can ask for information regarding permitted wheel/tire combinations at an authorized Mercedes-Benz Center.

⚠ **WARNING** Risk of accident due to incorrect dimensions of wheels and tires

If wheels and tires of the wrong size are installed, the wheel brakes or wheel suspension components may be damaged.

▶ Always replace wheels and tires with those that fulfill the specifications of the original part.

When replacing wheels, make sure to fit the correct:

- Designation
- Model

When replacing tires, make sure to install the correct:

- Designation
- Manufacturer
- Model

⚠ **WARNING** Risk of injury through exceeding the specified tire load rating or the permissible speed rating

Exceeding the specified tire load rating or the permissible speed rating may lead to tire damage and to the tires bursting.

▶ Therefore, only use tire types and sizes approved for your vehicle model.

▶ Observe the tire load rating and speed rating required for your vehicle.

! **NOTE** Vehicle and tire damage through tire types and sizes that have not been approved

For safety reasons, only use tires, wheels and accessories which have been specially approved by Mercedes-Benz for your vehicle.

These tires are specially adapted to the control systems, such as ABS, ESP® and 4MATIC, and marked as follows:

- MO = Mercedes-Benz Original
- MOE = Mercedes-Benz Original Extended (run-flat tire only for certain wheels)
- MO1 = Mercedes-Benz Original (only certain AMG tires)

Certain characteristics, such as handling, vehicle noise emissions, consumption, etc. may otherwise be adversely affected. Furthermore, other tire sizes could result in the tires rubbing against the body and axle components when loaded. This could result in damage to the tire or the vehicle.

Only use tires, wheels and accessories that have been checked and recommended by Mercedes-Benz.

NOTE Risk to driving safety from retreaded tires

Retreaded tires are neither tested nor recommended by Mercedes-Benz, since previous damage cannot always be detected on retreaded tires.

For this reason driving safety cannot be guaranteed.

▶ Do not use used tires if you have no information about their previous usage.

NOTE Possible damage to wheels or tires when driving over obstacles

Large wheels have a lower tire section width. The lower the tire section width, the greater is the risk of damage to wheels or tires when driving over obstacles.

▶ Avoid obstacles or drive particularly carefully.

NOTE Damage to electronic component parts from the use of tire-mounting tools

Vehicles with a tire pressure monitoring system: Electronic component parts are located in the wheel. Tire-mounting tools should not be used in the area of the valve.

This could otherwise damage the electronic component parts.

▶ Have the tires changed at a qualified specialist workshop only.

NOTE Damage to summer tires at low ambient temperatures

At low ambient temperatures, tears could form when driving with summer tires, causing permanent damage to the tires.

▶ At temperatures below 45 °F (7 °C), use M+S tires .

Accessory parts that are not approved for your vehicle by Mercedes-Benz or are not being used correctly can impair the operating safety.

Before purchasing and using non-approved accessories, visit a qualified specialist workshop and inquire about:

- Suitability
- Legal stipulations
- Factory recommendations

WARNING Risk of accident with high performance tires

The special tire tread in combination with the optimized tire compound means that the risk of skidding or hydroplaning on wet roads is increased.

In addition, the tire grip is greatly reduced at a low outside temperature and tire running temperature.

▶ Switch on the ESP® and adapt your driving style accordingly.

▶ Use M+S tire at outside temperatures of less than 10 °C (50 °F).

Observe the following when selecting, installing and replacing tires:

- Only use tires and wheels of the same type (summer tires, winter tires, MOExtended tires) and the same make.
- Only install wheels of the same size on one axle (left and right).

  It is only permissible to install a different wheel size in the event of a flat tire in order to drive to the specialist workshop.
- Only install tires of the correct size onto the wheels.
- **Vehicles with a tire pressure monitoring system:** All installed wheels must be equipped with functioning sensors for the tire pressure monitoring system.
- At temperatures below 45 °F (7 °C), use winter tires or all-season tire marked M+S for all wheels.

  Winter tires bearing the snowflake symbol in addition to the M+S marking provide the best possible grip in wintry road conditions.
- For M+S tires, only use tires with the same tread.
- Observe the maximum permissible speed for the M+S tires installed.

  If this is below the vehicle's maximum speed, this must be indicated by an appropriate label in the driver's field of vision.
- Break in new tires at moderate speeds for the first 60 miles (100 km).
- Replace the tires after six years at the latest, regardless of wear.
- **When replacing with tires that do not feature run-flat characteristics:** vehicles with MOExtended tires are not equipped with a TIREFIT kit at the factory. Equip the vehicle with a TIREFIT kit after replacing with tires that do not feature run-flat characteristics, e.g. winter tires.

For more information on wheels and tires, contact a qualified specialist workshop.

Be sure to also observe the following further related subjects:

- Notes on tire pressure (→ page 448)
- Tire and Loading Information placard (→ page 454)
- Tire size designation, load-bearing capacity, speed rating and load index (→ page 462)
- Tire pressure table (→ page 449)
- Notes on the emergency spare wheel (→ page 477)

Notes on rotating wheels

WARNING Risk of injury through different wheel sizes

Interchanging the front and rear wheels if the wheels or tires have different dimensions may severely impair the driving characteristics.

The wheel brakes or wheel suspension components may also be damaged.

▶ Rotate front and rear wheels only if the wheels and tires are of the same dimensions.

The wear patterns on the front and rear wheels differ:

- Front wheels wear more on the shoulder of the tire
- Rear wheels wear more at the center of the tire

Do not drive with tires that have too little tread depth. This significantly reduces traction on wet roads (hydroplaning).

On vehicles that have the same size front and rear wheels, rotate the wheels according to the intervals in the tire manufacturer's warranty book in your vehicle documents. If this is not available, rotate the tires every 3,000 to 6,000 miles (5,000 to 10,000 km), depending on the wear. Ensure that the direction of rotation is maintained.

Observe the instructions and safety notes on "Changing a wheel" when doing so (→ page 471).

Notes on storing wheels

When storing wheels, observe the following notes:

- After removing wheels, store them in a cool, dry and preferably dark place.
- Protect the tires from contact with oil, grease or fuel.

Overview of the tire-change tool kit

Apart from some country-specific variants, vehicles are not equipped with a tire-change tool kit. For more information on which tire-changing tools are required and approved for performing a wheel change on your vehicle, consult a qualified specialist workshop.

Required tire-change tools may include, for example:

- Jack
- Chock
- Lug wrench

The tire-change tool kit is located under the trunk floor.

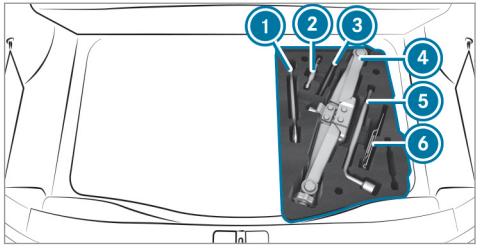

1. Ratchet
2. Alignment bolt
3. Jacking support
4. Jack
5. Lug wrench
6. Folding chock

Setting up the folding chock

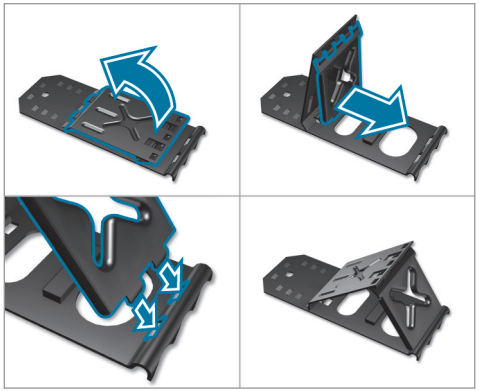

Preparing the vehicle for a wheel change

Requirements:

- The required tire-change tool kit is available. If your vehicle is not equipped with the tire-change tool kit, consult a qualified specialist workshop to find out about suitable tools.
- The vehicle is not on a slope.
- The vehicle is on solid, non-slippery and level ground.

▶ The electric parking brake is applied manually.

▶ Move the front wheels to the straight-ahead position.

▶ Shift the transmission to position P.

▶ **Vehicles with AIR BODY CONTROL or MAGIC BODY CONTROL:** Set the normal vehicle level.

▶ Switch off the engine.

▶ Make sure that the engine cannot be started.

▶ Place chocks or other suitable items under the front and rear of the wheel that is diagonally opposite the wheel you wish to change.

▶ Remove the hub caps if necessary (→ page 471).

▶ Raise the vehicle (→ page 472).

Removing and installing hub caps

Requirements:

- The vehicle is prepared for a wheel change (→ page 471).

Plastic hub cap

▶ **To remove:** turn the center cover of the hub cap counter-clockwise and remove the hub cap.

▶ **To install:** make sure that the center cover of the hub cap is turned counter-clockwise.

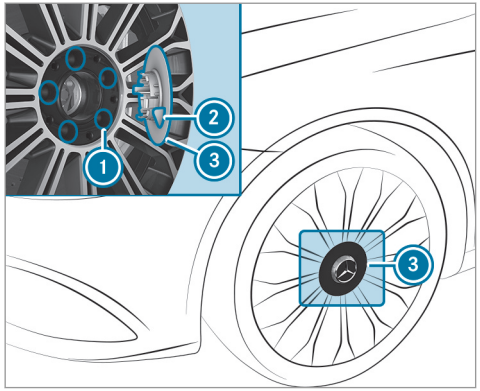

- Align center cap ② on the rear side of center cover ③ of the hub cap on one lug hole ①.
- Position the hub cap and turn the center cover clockwise until the hub cap engages physically and audibly.

Aluminum hub cap

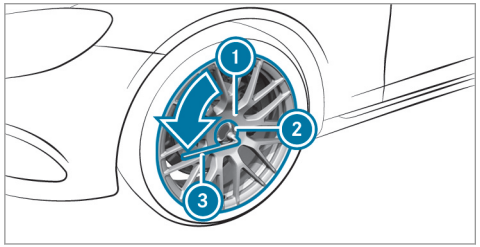

- **To remove:** position socket ② on hub cap ①.

ⓘ The socket can be found in the tire-change tool kit.

- Position wheel wrench ③ on socket ②.
- Using wheel wrench ③, turn hub cap ① counter-clockwise and remove it.
- **To install:** position hub cap ① and turn until it is completely flush with the wheel.
- Position socket ② on hub cap ①.
- Attach wheel wrench ③ to socket ② and tighten the hub cap clockwise.
  Specified tightening torque: 18 lb-ft (25 Nm).

Raising the vehicle when changing a wheel

Requirements:

- There are no persons in the vehicle.
- The vehicle is prepared for a wheel change (→ page 471).
- The hub caps have been removed (→ page 471).

Important notes on using the jack:

- Use only a vehicle-specific jack that has been approved by Mercedes-Benz to raise the vehicle.
- The jack is only designed for raising and holding the vehicle for a short time while a wheel is being changed and not for maintenance work under the vehicle.
- The jack must be placed on a firm, flat and non-slip surface.

- The foot of the jack must be positioned vertically under the jack support point.

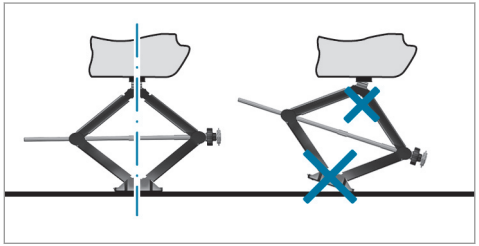

Rules of conduct when the vehicle is raised:

- Never place your hands or feet under the vehicle.
- Never lie under the vehicle.
- Do not start the engine and do not release the electric parking brake.
- Do not open or close any doors or the trunk lid.

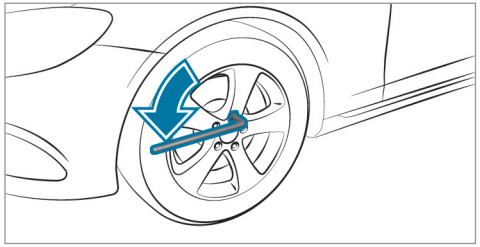

▶ Using the lug wrench, loosen the wheel bolts on the wheel you wish to change by about one full turn. Do not unscrew the bolts completely.

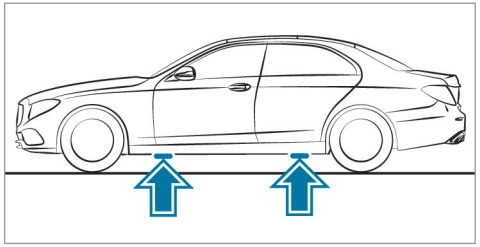

Position of jack support points

⚠ **WARNING** Risk of injury from incorrect positioning of the jack

If you do not position the jack correctly at the appropriate jacking point of the vehicle, the jack could tip with the vehicle raised.

▶ Only position the jack at the appropriate jacking point of the vehicle. The base of the jack must be positioned vertically under the jacking point of the vehicle.

NOTE Vehicle damage from the jack

If you do not position the jack correctly at the appropriate jack support point of the vehicle, the jack could tip over with the vehicle raised.

▶ The jack is designed exclusively for jacking up the vehicle at the jack support points.

▶ Take the ratchet wrench out of the tire-change tool kit and place it on the hexagon nut of the jack so that the letters "AUF" are visible.

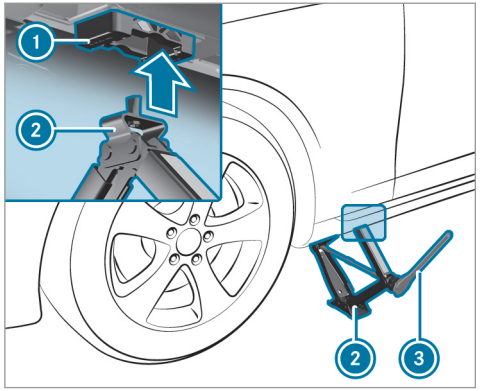

▶ Position jack ② at jack support point ①.

▶ Turn ratchet wrench ③ clockwise until jack ② sits completely on jack support point ① and the base of the jack lies evenly on the ground.

▶ Continue to turn ratchet wrench ③ until the tire is raised a maximum of 1.2 in (3 cm) off the ground.

▶ Loosen and remove the wheel (→ page 474).

Removing a wheel

Requirements:

- The vehicle is raised (→ page 472).

Mercedes-AMG vehicles: observe the notes in the Supplement. Otherwise, you may fail to recognize dangers.

When changing a wheel, avoid applying any force to the brake discs, since this could impair the level of comfort when braking.

NOTE Damage to threading from dirt on wheel bolts

▶ Do not place wheel bolts in sand or on a dirty surface.

▶ Unscrew the uppermost wheel bolt completely.

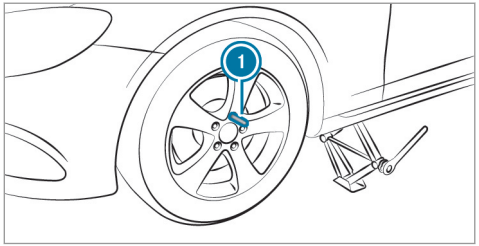

- Screw alignment bolt (1) into the thread instead of the wheel bolt.
- Unscrew the remaining wheel bolts completely.
- Remove the wheel.
- Install the new wheel (→ page 475).

Mounting a new wheel

Requirements:

- The wheel is removed (→ page 474).

Mercedes-AMG vehicles: observe the notes in the Supplement. Otherwise, you may not recognize dangers.

⚠ **WARNING** Risk of accident from losing a wheel

Oiled, greased or damaged wheel bolt/wheel nut threads or wheel hub/wheel mounting bolt threads can cause the wheel bolts/wheel nuts to come loose.

As a result, you could lose a wheel while driving.

- Never oil or grease the threads.
- In the event of damage to the threads, contact a qualified specialist workshop immediately.
- Have the damaged wheel bolts or damaged hub threads replaced.
- Do not continue driving.

- Observe the information on the choice of tires (→ page 467).

For tires with a specified direction of rotation, an arrow on the side wall of the tire indicates the correct direction of rotation. Observe the direction of rotation when installing.

- Slide the wheel to be mounted onto the alignment bolt and push it on.

⚠ **WARNING** Risk of injury from tightening wheel bolts and nuts

If you tighten the wheel bolts or wheel nuts when the vehicle is raised, the jack could tip.

- Only tighten wheel bolts or wheel nuts when the vehicle is on the ground.

- Be sure to observe the instructions and safety notes on "Changing a wheel" (→ page 467).
- For safety reasons, only use wheel bolts which have been approved by Mercedes-Benz and for the wheel in question.

NOTE Damage to paintwork of the wheel rim when screwing on the first wheel bolt

If the wheel has too much play when screwing in the first wheel bolt, the wheel rim paint can be damaged.

▶ Press the wheel firmly against the wheel hub when screwing on the first wheel bolt.

▶ Tighten the wheel bolts evenly in a diagonal pattern in the order indicated until they are finger-tight.

▶ Unscrew the alignment bolt.

▶ Tighten the last wheel bolt until it is finger-tight.

▶ Lower the vehicle (→ page 476).

Lowering the vehicle after a wheel change

Requirements:

- The new wheel has been installed (→ page 475).

▶ Place the ratchet onto the hexagon nut of the jack so that the letters "AB" are visible.

▶ **To lower the vehicle:** turn the ratchet of the jack counter-clockwise.

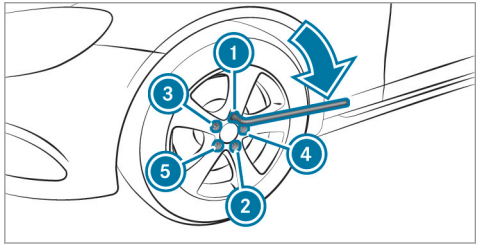

▶ Tighten the wheel bolts evenly in a diagonal pattern in the order indicated ① to ⑤ with a maximum of 59 lb-ft (80 Nm).

▶ Tighten the wheel bolts evenly in a diagonal pattern in the order indicated ① to ⑤ to the specified tightening torque of 111 lb-ft (150 Nm).

WARNING Risk of injury through incorrect tightening torque

The wheels could come loose if the wheel bolts or wheel nuts are not tightened to the prescribed tightening torque.

▶ Make sure the wheel bolts or wheel nuts are tightened to the prescribed tightening torque.

▶ If you are not sure, do not move the vehicle. Consult a qualified specialist workshop and have the tightening torque checked immediately.

▶ Check the tire pressure of the newly mounted wheel and adjust accordingly.

▶ **Vehicles with a tire pressure monitoring system:** Restart the tire pressure monitoring system (→ page 453).
Exception: the new wheel is an emergency spare wheel.

Make sure to observe the following further related subject:

- Notes on tire pressure (→ page 448)

Emergency spare wheel

Notes on the emergency spare wheel

⚠ **WARNING** Risk of accident caused by incorrect wheel and tire dimensions

The wheel or tire size and the tire type of the emergency spare wheel or spare wheel and the wheel to be replaced may differ. Mounting an emergency spare wheel/spare wheel may severely impair the driving characteristics.

To prevent hazardous situations:

- ▶ Adapt your driving style accordingly and drive carefully.
- ▶ Never mount more than one emergency spare wheel or spare wheel that differs in size.
- ▶ Only use an emergency spare wheel or spare wheel of a different size briefly.
- ▶ Do not switch off ESP®.
- ▶ >Have the emergency spare wheel or spare wheel of a different size replaced at the nearest qualified specialist workshop. The new wheel must have the correct dimensions.

Check the tire pressure of the emergency spare wheel installed. Correct the pressure as necessary.

The maximum permissible speed with an emergency spare wheel installed is 50 mph (80 km/h).

Do not install the emergency spare wheel with snow chains.

Replace the emergency spare wheel after six years at the latest, regardless of wear.

ⓘ **Vehicles with a tire pressure monitoring system:** If an emergency spare wheel is installed the tire pressure monitoring system cannot function reliably. For a few minutes after an emergency spare wheel is installed, the system may still display the tire pressure of the removed wheel. Only restart the system again when the emergency spare wheel has been replaced with a new wheel.

Be sure to also observe the following further related subjects:

- Notes on tire pressure (→ page 448)
- Tire and Loading Information placard (→ page 454)
- Tire pressure table (→ page 449)

Notes on technical data

Plug-in hybrid: observe the notes in the Supplement. Otherwise, you may not recognize dangers.

Mercedes-AMG vehicles: observe the notes in the Supplement. Otherwise, you may not recognize dangers.

The data stated only applies to vehicles with standard equipment. You can obtain further information from an authorized Mercedes-Benz Center.

Vehicle electronics

Two-way radios

Notes on installing two-way radios

⚠ **WARNING** Risk of accident due to improper work on two-way radios

The electromagnetic radiation from two-way radios can interfere with the on-board electronics if RF transmitters are manipulated or retrofitted incorrectly.

This could jeopardize the operating safety of the vehicle.

▶ You should have all work on electrical and electronic components carried out at a qualified specialist workshop.

⚠ **WARNING** Risk of accident from incorrect operation of two-way radios

If you operate two-way radios incorrectly in the vehicle, the electromagnetic radiation could interfere with the on-board electronics, e.g.:

- if the two-way radio is not connected to an exterior antenna
- if the exterior antenna is not correctly mounted or is not of low reflection

This could jeopardies the operating safety of the vehicle.

▶ Have the low-reflection exterior antenna installed at a qualified specialist workshop.

▶ When operating two-way radios in the vehicle, always connect them to the low-reflection exterior antenna.

! **NOTE** Invalidation of the operating permit due to failure to comply with the instructions for installation and use

The operating permit may be invalidated if the instructions for installation and use of two-way radios are not observed.

▶ Only use approved frequency bands.

▶ Observe the maximum permissible output power in these frequency bands.

▶ Only use approved antenna positions.

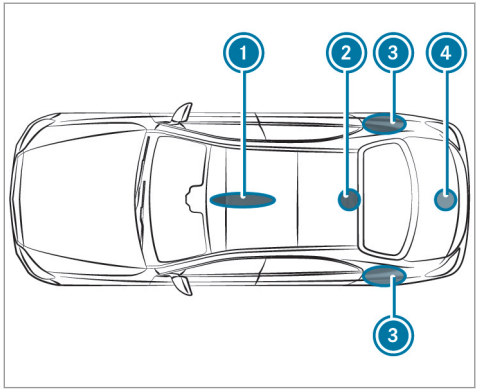

1. Front roof area
2. Rear roof area
3. Rear fenders
4. Trunk lid

On vehicles with a panoramic sliding sunroof, installing an antenna to the front or rear roof area is not permitted.

On the rear fenders, it is recommended that you install the antenna on the side of the vehicle closest to the center of the road.

Use Technical Specification ISO/TS 21609 (Road Vehicles – "EMCs for installation of aftermarket radio frequency transmitting equipment") when retrofitting two-way radios. Comply with the legal requirements for detachable parts.

If your vehicle has installations for two-way radio equipment, use the power supply and antenna connectors provided in the pre-installation. Observe the manufacturer's supplements when installing.

Two-way radio transmission output

The maximum transmission output (PEAK) at the base of the antenna must not exceed the values in the following table:

Frequency band and maximum transmission output

Frequency band	Maximum transmission output
Short wave 3 - 54 MHz	100 W
4 m frequency band 74 - 78 MHz	30 W
2 m frequency band 144 - 174 MHz	50 W
trunked radio system/Tetra 380 - 460 MHz	10 W
70 cm frequency band 400 - 460 MHz	35 W
Two-way radio (2G/3G/4G)	10 W

The following can be used in the vehicle without restrictions:

- RF transmitters with a maximum transmission output of up to 100 mW
- RF transmitters with transmitter frequencies in the 380 - 410 MHz frequency band and a maximum transmission output of up to 2 W (trunked radio system/Tetra)
- mobile phones (2G/3G/4G)

There are no restrictions when positioning the antenna on the outside of the vehicle for some wavebands.

This applies to the following wavebands:

- trunked radio system/Tetra
- 70 cm frequency band
- 2G/3G/4G

Vehicle identification plate, VIN and engine number overview

Vehicle identification plate

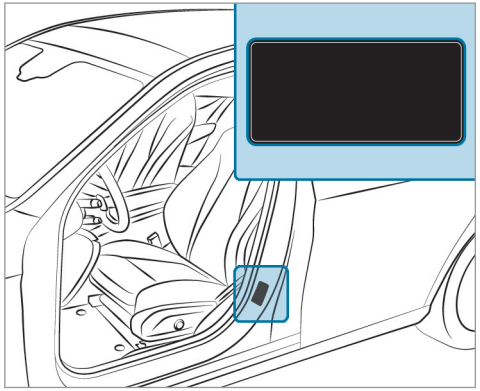

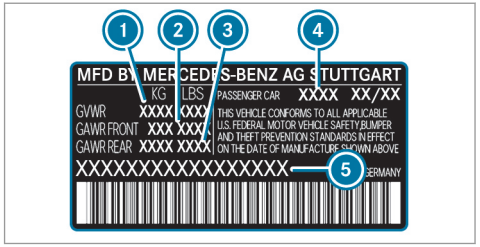

Vehicle identification plate (USA only)

1. Maximum permissible gross vehicle weight
2. Maximum permissible front axle load
3. Maximum permissible rear axle load
4. Paint code
5. VIN (vehicle identification number)

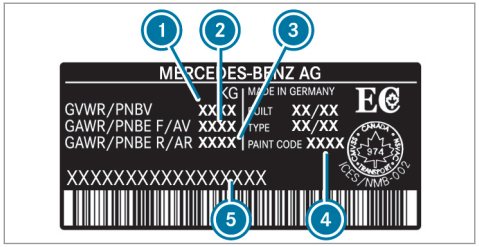

Vehicle identification plate (Canada only)

1. Maximum permissible gross vehicle weight
2. Maximum permissible front axle load
3. Maximum permissible rear axle load
4. Paint code
5. VIN (vehicle identification number)

The permissible gross vehicle weight is made up of the vehicle weight, all vehicle occupants, the fuel and the load. The maximum gross axle weight rating is the maximum weight that can be carried on one axle (front or rear axle).

Never exceed the permissible gross vehicle weight or the maximum gross axle weight rating for the front or rear axle.

VIN in front of the front seat

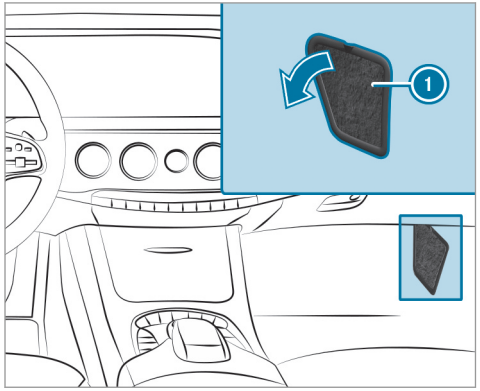

1. VIN (vehicle identification number)

Additional plates

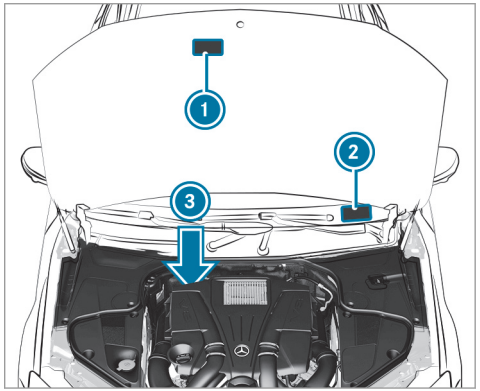

1. Plate with information about emissions testing, including confirmation of emissions guidelines at the U.S. federal level as well as for California
2. VIN (vehicle identification number)
3. Engine number (stamped into the crankcase)

Operating fluids

Notes on operating fluids

Mercedes-AMG vehicles: observe the notes in the Supplement. Otherwise, you may fail to recognize dangers.

⚠ **WARNING** Risk of injury from operating fluids harmful to your health

Operating fluids may be poisonous and harmful to your health.

- ▶ Observe the text on the original containers when using, storing or disposing of operating fluids.
- ▶ Always store operating fluids sealed in their original containers.
- ▶ Always keep children away from operating fluids.

⚠ **WARNING** Risk of fire or explosion from fuel

Fuels are highly flammable.

- ▶ Fire, open flames, smoking and creation of sparks must be avoided.
- ▶ Switch off the ignition and, if available, the stationary heater, before and while refueling the vehicle.

⚠ **WARNING** Risk of injury from fuels

Fuels are poisonous and hazardous to your health.

- ▶ Do not swallow fuel or let it come into contact with skin, eyes or clothing.
- ▶ Do not inhale fuel vapor.
- ▶ Keep children away from fuel.
- ▶ Keep doors and windows closed during the refueling process.

If you or other people come into contact with fuel, observe the following:

- ▶ Immediately rinse fuel off your skin with soap and water.
- ▶ If fuel comes into contact with your eyes, immediately rinse them thoroughly with clean water. Seek medical attention immediately.
- ▶ If you swallow fuel, seek medical attention immediately. Do not induce vomiting.
- ▶ Change immediately out of clothing that has come into contact with fuel.

ENVIRONMENTAL NOTE Environmental pollution caused by environmentally irresponsible disposal

- ▶ Dispose of operating fluids in an environmentally responsible manner.

Operating fluids include the following:

- Fuels
- Lubricants
- Coolant
- Brake fluid
- Windshield washer fluid
- Climate control system refrigerant

Only use products approved by Mercedes-Benz.

You can identify operating fluids approved by Mercedes-Benz by the following inscriptions on the container:

- MB-Freigabe (e.g. MB-Freigabe 229.51)
- MB-Approval (e.g. MB-Approval 229.51)

Further information on approved operating fluids:

- in the Mercedes-Benz Specifications for Operating Fluids at http://bevo.mercedes-benz.com (by entering the designation)
- in the Mercedes-Benz Specifications for Operating Fluids in the Mercedes-Benz BeVo app (by entering the designation)
- at a qualified specialist workshop

Fuel

Notes on fuel grades for vehicles with a gasoline engine

Observe the notes on operating fluids (→ page 482).

! NOTE Damage caused by the wrong fuel

Even small amounts of the wrong fuel could result in damage to the fuel system, the engine and the emission control system.

▶ Only refuel with low-sulfur unleaded fuel.

This fuel may contain up to 10% ethanol by volume. Your vehicle is suitable for use with E10 fuel.

Never refuel with one of the following fuels:

- Diesel
- Gasoline with more than 10% ethanol by volume, e.g. E15, E85, E100
- Gasoline with more than 3% methanol by volume, e.g. M15, M30, M85, M100
- Gasoline with additives containing metal

If you have accidentally refueled with the wrong fuel:

▶ Do not switch on the ignition.

▶ Consult a qualified specialist workshop.

If the available fuel is not sufficiently low in sulfur, this can produce unpleasant odors.

Only refuel with fuel, that has at least the octane number specified in the instruction label in the fuel filler flap (→ page 189).

If you want maximum engine output: only refuel with unleaded premium grade gasoline with at least 91 AKI/95 RON.

As a temporary measure, if the recommended fuel is not available, you may also use unleaded regular gasoline with an octane number of at least 87 AKI/91 RON.

! NOTE Premature wear through unleaded regular gasoline

Unleaded regular gasoline can cause the engine to wear more quickly and impair longevity and performance.

If unleaded premium grade gasoline is unavailable and you have to refuel using unleaded regular gasoline with 87 AKI/91 RON:

- ▶ Only fill the fuel tank to half full with unleaded regular gasoline and top up as soon as possible with unleaded premium grade gasoline.
- ▶ Do not drive at the maximum speed.
- ▶ Avoid sudden acceleration and engine speeds over 3000 rpm.

This may reduce engine performance and increase fuel consumption. Never refuel using gasoline with a lower octane number.

Further information on fuel can be found:

- at a gas station
- at a qualified specialist workshop
- **USA only:** at http://www.mbusa.com

Information on additives in gasoline
Observe the notes on operating fluids (→ page 482).

! NOTE Damage from use of unsuitable additives

Even small amounts of the wrong additive may lead to malfunctions occurring.

- ▶ Only add cleaning additives recommended by Mercedes-Benz to the fuel.

Mercedes-Benz recommends that you use fuel brands that have additives.

In some countries, the fuel available may not have sufficient additives. Residue could build up in the fuel injection system as a result. In this case, in consultation with an authorized Mercedes-Benz Center, the fuel may be mixed with the cleaning additive recommended by Mercedes-Benz. Be sure to observe the notes and mixing ratios specified on the container.

Tank content and fuel reserve

Model	Total capacity
All models	21.1 gal (80.0 liters)
Model	**Of which reserve**
All models	2.1 gal (8.0 liters)

Engine oil

Notes on engine oil
Observe the notes on operating fluids (→ page 482).

NOTE Engine damage caused by an incorrect oil filter, incorrect oil or additives

- ▶ Do not use engine oils or oil filters other than those which meet the specifications necessary for the prescribed service intervals.
- ▶ Do not alter the engine oil or oil filter in order to achieve longer change intervals than prescribed.
- ▶ Do not use additives.
- ▶ Have the engine oil changed after the prescribed intervals.

Mercedes-Benz recommends that you have the oil change carried out at a qualified specialist workshop.

Further information on engine oil and oil filters is available at the following locations:

- In the Mercedes-Benz Specifications for Operating Fluids by entering the designation
  - At https://bevo.mercedes-benz.com
  - In the Mercedes-Benz BeVo app
- At a qualified specialist workshop

Quality and capacity of engine oil

MB-Freigabe or MB-Approval

Sedan	Engine oil specifications
S 450 4MATIC	229.5 229.6*
S 560 4MATIC	229.52 229.61*

MB-Freigabe or MB-Approval

Long wheelbase vehicles	Engine oil specifications
S 450 S 450 4MATIC	229.5 229.6*
All other models	229.52 229.61*

MB-Freigabe or MB-Approval

Mercedes-Maybach	Engine oil specifications
S 650 Mercedes-Maybach	229.5
S 560 4MATIC Mercedes-Maybach	229.52 229.61*

* Recommended for lowest possible fuel consumption (lowest SAE viscosity class in each case; observe possible restrictions of the approved SAE viscosity classes).

To achieve the lowest possible fuel consumption, it is recommended to use the engine oil specifications marked in the table for the lowest SAE viscosity class. Possible restrictions of the approved SAE viscosity classes must be observed.

S 650 Mercedes-Maybach: Only use SAE 0W-40 or SAE 5W-40 engine oils.

The following values refer to an oil change, including the oil filter.

Capacity

Sedan	Capacity
S 450 4MATIC	6.9 US qt (6.5 liters)
S 560 4MATIC	9.5 US qt (9.0 liters)

Long wheelbase vehicles	Capacity
S 450 S 450 4MATIC	6.9 US qt (6.5 liters)
All other models	9.5 US qt (9.0 liters)

Mercedes-Maybach	Capacity
S 650 Mercedes-Maybach	11.1 US qt (10.5 liters)
S 560 4MATIC Mercedes-Maybach	9.5 US qt (9.0 liters)

Notes on brake fluid

Observe the notes on operating fluids (→ page 482).

WARNING Risk of an accident due to vapor pockets forming in the brake system

The brake fluid constantly absorbs moisture from the air. This lowers the boiling point of the brake fluid. If the boiling point is too low, vapor pockets may form in the brake system when the brakes are applied hard.

This causes the braking effect to be impaired.

▶ Have the brake fluid renewed at the specified intervals.

Have the brake fluid regularly replaced at a qualified specialist workshop.
Only use brake fluid approved by Mercedes-Benz according to MB-Freigabe or MB-Approval 331.0.

You can obtain further information on brake fluid in the following places:

- In the Mercedes-Benz Specifications for Operating Fluids
  - At https://bevo.mercedes-benz.com
  - In the Mercedes-Benz BeVo app
- At a qualified specialist workshop

Coolant

Notes on coolant

Observe the notes on operating fluids (→ page 482).

WARNING - Risk of fire and injury from antifreeze

If antifreeze comes into contact with hot component parts in the engine compartment, it may ignite.

▶ Allow the engine to cool down before adding antifreeze.

▶ Make sure that no antifreeze spills out next to the filler opening.

▶ Thoroughly clean off any antifreeze from component parts before starting the vehicle.

NOTE Damage caused by incorrect coolant

▶ Only add coolant that has been premixed with the required antifreeze protection.

Information on coolant is available at the following locations:

- In the Mercedes-Benz Specification for Operating Fluids 310.1
  - At http://bevo.mercedes-benz.com
  - In the Mercedes-Benz BeVo app
- At a qualified specialist workshop

NOTE Overheating at high outside temperatures

If an inappropriate coolant is used, the engine cooling system is not sufficiently protected against overheating and corrosion at high outside temperatures.

▶ Always use coolant approved by Mercedes-Benz.

▶ Observe the instructions in the Mercedes-Benz Specifications for Operating Fluids 310.1.

Have the coolant regularly replaced at a qualified specialist workshop.

The proportion of corrosion inhibitor/antifreeze concentrate in the engine cooling system should be:

- a minimum of 50% (antifreeze protection down to approximately -35 °F (-37 °C))
- a maximum of 55% (antifreeze protection down to -49 °F (-45 °C))

Coolant capacity

Sedan	Capacity
S 450 4MATIC	13.9 US qt (13.2 liters)
S 560 4MATIC	15.0 US qt (14.2 liters)

Long wheelbase vehicles	Capacity
S 450 S 450 4MATIC	13.9 US qt (13.2 liters)
All other models	15.0 US qt (14.2 liters)

Mercedes-Maybach	Capacity
S 650 Mercedes-Maybach	16.9 US qt (16.0 liters)
S 560 4MATIC Mercedes-Maybach	15.0 US qt (14.2 liters)

Notes on windshield washer fluid

Observe the notes on operating fluids (→ page 482).

WARNING - Risk of fire and injury from windshield washer concentrate

Windshield washer concentrate is highly flammable. It could ignite if it comes into contact with hot engine component parts or the exhaust system.

▶ Make sure that no windshield washer concentrate spills out next to the filler opening.

NOTE Blocked spray nozzles caused by mixing windshield washer fluids

▶ Do not mix MB SummerFit and MB WinterFit with other windshield washer fluids.

Do not use distilled or de-ionized water as the fill level sensor may be triggered erroneously.

Recommended windshield washer fluid:

- Above freezing point: e.g. MB SummerFit
- Below freezing point: e.g. MB WinterFit

For the correct mixing ratio, refer to the information on the antifreeze container.

Mix the washer fluid with the windshield washer fluid all year round.

Refrigerant

Notes on refrigerant

Observe the notes on operating fluids (→ page 482).

NOTE Damage due to incorrect refrigerant

If a non-approved refrigerant is used, the climate control system may be damaged.

▶ Only use the refrigerant R-134a

NOTE Damage to the climate control system due to incorrect refrigerant compressor oil

▶ Only use refrigerant compressor oil that has been approved by Mercedes-Benz.

▶ Do not mix the approved refrigerant compressor oil with a different refrigerant compressor oil.

Work on the climate control system may be carried out only by a qualified specialist workshop. All applicable regulations, as well as SAE standard J639, must be adhered to.

The information label on the climate control system for the refrigerant type and the refrigerant compressor oil is located on the inside of the hood.

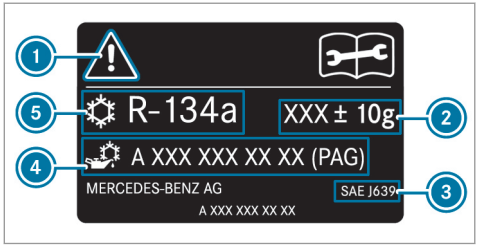

1. Hazard and service warning symbols
2. Refrigerant filling capacity
3. Applicable standards
4. PAG oil part number
5. Refrigerant type

Symbols 1 indicate the following:

- Possible dangers
- Having maintenance work carried out at a qualified specialist workshop

Filling capacity for refrigerant and PAG oil

Sedans, vehicles with a long wheelbase	Refrigerant
All models	23.3 ± 0.4 oz (660 ± 10 g)
Mercedes-Maybach	**Refrigerant**
All models	27.2 ± 0.4 oz (770 ± 10 g)

Sedans, vehicles with a long wheelbase	PAG oil
All models	3.9 ± 0.4 oz (110 ± 10 g)
Mercedes-Maybach	**PAG oil**
All models	4.2 ± 0.4 oz (120 ± 10 g)

Vehicle data

Vehicle dimensions

The heights specified may vary as a result of:

- Tires
- Load
- Condition of the suspension
- Optional equipment

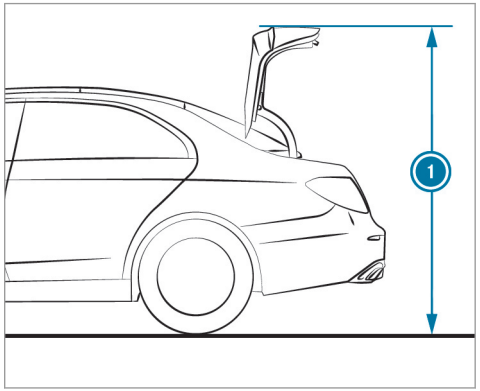

Height when opened

Sedan	① Height when opened
All models	71.1 in (1806 mm)
Long wheelbase vehicles	**① Height when opened**
S 450 4MATIC S 450	70.9 in (1803 mm)
All other models	71.1 in (1806 mm)
Mercedes-Maybach	**① Height when opened**
All models	71.2 in (1808 mm)

Vehicle dimensions

Sedan	
Vehicle length	201.8 in (5125 mm)
Vehicle width including outside mirrors	83.9 in (2130 mm)
Vehicle width without outside mirrors	74.8 in (1899 mm)
Wheelbase	119.5 in (3035 mm)
Long wheelbase vehicles	
Vehicle length	206.9 in (5255 mm)
Vehicle width including outside mirrors	83.9 in (2130 mm)
Vehicle width without outside mirrors	74.8 in (1899 mm)
Wheelbase	124.6 in (3165 mm)

Mercedes-Maybach	
Vehicle length	215 in (5462 mm)
Vehicle width including outside mirrors	83.9 in (2130 mm)
Vehicle width without outside mirrors	74.8 in (1899 mm)
Wheelbase	132.5 in (3365 mm)

Vehicle height

Sedan	
All models	59.0 in (1499 mm)

Long wheelbase vehicles	
S 450 4MATIC S 450	58.8 in (1494 mm)
All other models	58.9 in (1497 mm)
Mercedes-Maybach	
All models	59 in (1500 mm)

Weights and loads

Please note that for the specified vehicle data:

- Items of optional equipment increase the curb weight and reduce the payload.

Roof load

All models (Sedan)	
Maximum roof load	220 lb (100 kg)
All other models (vehicles with a long wheelbase)	
Maximum roof load	220 lb (100 kg)

Display messages

Introduction

Notes on display messages

Display messages appear on the multifunction display.

Display messages with graphic symbols are simplified in the Operator's Manual and may differ from the symbols on the multifunction display. The multifunction display shows high-priority display messages in red. Certain display messages are accompanied by a warning tone.

Please act in accordance with the display messages and follow the additional notes in the Operator's Manual.

For some display messages, a symbol will also be shown:

- ⓘ Further information
- × Hide display message

You can select the desired symbol by swiping left or right on the left-hand Touch Control. Press the ⓘ symbol to show further information on the multifunction display. Press the × symbol to hide the display message.

You can hide low-priority display messages by pressing the button or the left-hand Touch Control. The display messages will then be stored in the message memory.

Rectify the cause of a display message as quickly as possible.

High-priority display messages cannot be hidden. The multifunction display shows these display messages continuously until the cause of the display message has been rectified.

Calling up stored display messages

On-board computer:

Service ▸▸ 1 Message

If there are no display messages, No Messageswill appear on the multifunction display.

▶ Scroll through the display messages by swiping upwards or downwards on the left-hand Touch Control.

▶ **To exit the message memory:** press the button.

Occupant safety

Display messages	Possible causes/consequences and ▶ Solutions
 SRS Malfunction Service Required	* The restraint system is malfunctioning (→ page 34). **⚠ WARNING** Risk of injury due to malfunctions in the restraint system If the restraint system is malfunctioning, restraint system components may be triggered unintentionally or may not deploy as intended during an accident. This may affect the Emergency Tensioning Devices or airbags, for example. ▶ Have the restraint system checked and repaired immediately at a qualified specialist workshop. Recognition of a restraint system malfunction: • The restraint system warning lamp does not light up when the ignition is switched on. • The restraint system warning lamp lights up continuously or repeatedly during a journey. ▶ Consult a qualified specialist workshop immediately.
 Front Left Malfunction Service Required (example)	* The corresponding restraint system is malfunctioning (→ page 34). **⚠ WARNING** Risk of injury due to malfunctions in the restraint system If the restraint system is malfunctioning, restraint system components may be triggered unintentionally or may not deploy as intended during an accident. This may affect the Emergency Tensioning Devices or airbags, for example. ▶ Have the restraint system checked and repaired immediately at a qualified specialist workshop.

Display messages	Possible causes/consequences and ▶ Solutions
	Recognition of a restraint system malfunction: • The restraint system warning lamp does not light up when the ignition is switched on. • The restraint system warning lamp lights up continuously or repeatedly during a journey. ▶ Consult a qualified specialist workshop immediately.
 Left Side Curtain Airbag Malfunction Service Required (example)	* The corresponding window curtain airbag is malfunctioning (→ page 34). ⚠ **WARNING** Risk of injury or fatal injury due to malfunctions in the window airbag If the window airbag is malfunctioning, it might be triggered unintentionally or might not be triggered at all in the event of an accident with high deceleration. ▶ Have the window airbag checked and repaired immediately at a qualified specialist workshop. ▶ Consult a qualified specialist workshop immediately.
Front Passenger Airbag Disabled See Operator's Manual	* The front passenger airbag has been disabled even though an adult or a person with an adult stature is on the front passenger seat. If additional forces are applied to the seat, the weight the system detects may be too low. ⚠ **WARNING** Risk of injury or fatal injury due to a disabled front passenger airbag If the front passenger airbag is disabled, the front passenger airbag will not be deployed in the event of an accident and cannot perform its intended protective function.

Display messages	Possible causes/consequences and ▶ Solutions
	A person in the front passenger seat could then, for example, come into contact with the vehicle's interior, especially if the person is sitting too close to the cockpit. ▶ Make sure, both before and during the journey, that the status of the front passenger airbag is correct. ▶ Stop the vehicle immediately in accordance with the traffic conditions. ▶ Check the status of the automatic front passenger airbag actuation (→ page 45). ▶ If necessary, consult a qualified specialist workshop immediately.
Front Passenger Airbag Enabled See Operator's Manual	* The front passenger airbag is enabled while the vehicle is in motion: • even when a child, a person of small stature or an object weighing less than the system weight threshold is located on the front passenger seat • even when the front passenger seat is not occupied The system may detect objects or forces that are adding to the weight applied to the seat. ⚠ **WARNING** Risk of injury or fatal injury if a child restraint system is used while the front passenger front airbag is enabled If you secure a child in a child restraint system on the front passenger seat and the front passenger airbag is enabled, the front passenger airbag can deploy in the event of an accident. The child could be struck by the airbag. ▶ Ensure, both before and during the journey, that the status of the front passenger airbag is correct.

Display messages	Possible causes/consequences and ▶ Solutions
	NEVER use a rearward facing child restraint on a seat protected by an ACTIVE AIRBAG in front of it, DEATH or SERIOUS INJURY to the CHILD can occur. ▶ Stop the vehicle immediately in accordance with the traffic conditions. ▶ Check the status of the automatic front passenger airbag actuation (→ page 45). ▶ If necessary, consult a qualified specialist workshop immediately.
PRE-SAFE Inoperative See Operator's Manual	* The PRE-SAFE® functions are malfunctioning. ▶ Consult a qualified specialist workshop.

SmartKey

Display messages	Possible causes/consequences and ▶ Solutions
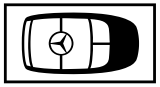 Obtain a New Key	* The SmartKey needs to be replaced. ▶ Consult a qualified specialist workshop.

Display messages	Possible causes/consequences and ▶ Solutions
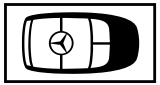 Replace Key Battery	* The SmartKey battery is discharged. ▶ Replace the battery (→ page 66).
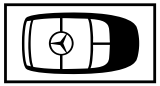 Key Not Detected (white display message)	* The SmartKey is currently undetected. ▶ Change the location of the SmartKey in the vehicle. ▶ If the SmartKey is still not recognized, place it in the marked space for starting with the SmartKey (→ page 173).
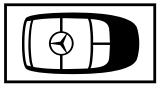 Key Not Detected (red display message)	* The SmartKey cannot be detected and may no longer be in the vehicle. The SmartKey is no longer in the vehicle and you switch off the engine: • You can no longer start the engine. • You cannot centrally lock the vehicle. ▶ Ensure that the SmartKey is in the vehicle. If the SmartKey detection function has a malfunction due to a strong radio signal source: ▶ Stop the vehicle immediately in accordance with the traffic conditions. ▶ Place the SmartKey in the marked space for starting the engine with the SmartKey (→ page 173).

Display messages	Possible causes/consequences and ▶ Solutions
Place the Key in the Marked Space See Operator's Manual	* SmartKey detection is malfunctioning. ▶ Change the location of the SmartKey in the vehicle. ▶ Place the SmartKey in the marked space for starting the engine with the SmartKey (→ page 173).
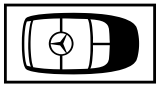 Don't Forget Your Key	* A warning tone also sounds. This message reminds you to take your key with you when you leave the vehicle.

Lights

Display messages	Possible causes/consequences and ▶ Solutions
 Check Left Low Beam (example)	* The corresponding light source is faulty. ▶ Drive on carefully. ▶ Consult a qualified specialist workshop immediately. ⓘ LED light bulbs: the display message for the corresponding lamp appears only when all the light-emitting diodes in the lamp are faulty.

Display messages	Possible causes/consequences and ▶ Solutions
Malfunction See Operator's Manual	* The exterior lighting is malfunctioning. ▶ Consult a qualified specialist workshop.
Automatic Headlamp Mode Inoperative	* The light sensor is malfunctioning. ▶ Consult a qualified specialist workshop.
Active Headlamps Inoperative	* The active headlamps are malfunctioning. ▶ Consult a qualified specialist workshop.
Switch On Headlamps	* You are driving without low-beam headlamps. ▶ Turn the light switch to the [≡D] or [AUTO] position.

Display messages	Possible causes/consequences and ▶ Solutions
Switch Off Lights	* You are leaving the vehicle and the lights are still switched on. ▶ Turn the light switch to the AUTO position.
Intell. Light System Inoperative	* The Intelligent Light System is faulty. The lighting system continues to function properly without the functions of the Intelligent Light System. ▶ Consult a qualified specialist workshop.
Adaptive Highbeam Assist Currently Unavailable See Operator's Manual	* Adaptive Highbeam Assist is temporarily unavailable. The system limits have been reached (→ page 153). ▶ Drive on. Once the cause of the problem is no longer present, the system will be available again. The Adaptive Highbeam Assist Now Available display message will appear.
Adaptive Highbeam Assist Inoperative	* Adaptive Highbeam Assist is malfunctioning. ▶ Consult a qualified specialist workshop.
Adaptive Highbeam Assist Camera View Restricted See Operator's Manual	* The camera view is restricted. Possible causes are: • Dirt on the windshield in the camera's field of vision

Display messages	Possible causes/consequences and ▶ Solutions
	• Heavy rain, snow or fog Driving systems and driving safety systems may be malfunctioning or temporarily unavailable. Once the cause of the problem is no longer present, the driving systems and driving safety systems will be available again. If the display message does not disappear: ▶ Pull over and stop the vehicle safely as soon as possible, paying attention to road and traffic conditions. ▶ Clean the windshield.
Hazard Warning Flashers Malfunctioning	* The hazard warning lamp switch is malfunctioning. ▶ Consult a qualified specialist workshop.

Climate control

Display messages	Possible causes/consequences and ▶ Solutions
Air Conditioning Malfunction See Operator's Manual	* Operation of the climate control system is temporarily restricted. Airflow and fresh air supply are set to automatic mode. ▶ Have the climate control system checked at a qualified specialist workshop.
Let fresh air into the vehicle interior. Air Conditioning Malf. Visit Workshop	* The climate control system is malfunctioning.

Display messages	Possible causes/consequences and ▶ Solutions
	⚠ **WARNING** Risk of injury and accident due to an insufficient supply of fresh air If the climate control system is malfunctioning, carbon dioxide levels may increase in the vehicle interior. Breathing in carbon dioxide may cause dizziness. ▶ Open the window to ensure that there is a sufficient supply of fresh air. ▶ Open the window to ensure an adequate supply of fresh air. ▶ Consult a qualified specialist workshop immediately.

Vehicle

Display messages	Possible causes/consequences and ▶ Solutions
⚠ Vehicle Ready to Drive Switch the Ignition Off Before Exiting	* You are leaving the vehicle when it is in a ready-to-drive state. ▶ When you leave the vehicle, switch off the ignition, secure the vehicle against rolling away and take the Smart-Key with you. ▶ If you do not leave the vehicle, switch off the electrical consumers, e.g. the seat heating. Otherwise, the 12 V battery may discharge and it will then be possible to start the vehicle only with the aid of a second battery (starting assistance).

Display messages	Possible causes/consequences and ▶ Solutions
 Steering Malfunction Increased Physical Effort See Operator's Manual	* The power steering assistance is malfunctioning. ⚠ **WARNING** Risk of an accident due to altered steering characteristics If the power assistance of the steering fails partially or completely, you will need to use more force to steer. ▶ If safe steering is possible, drive on carefully. ▶ Visit or consult a qualified specialist workshop immediately. ▶ If safe steering is possible, drive on carefully. ▶ Visit or consult a qualified specialist workshop immediately.
 Steering Malfunction Stop Immediately See Operator's Manual	* The steering is malfunctioning. Steering capability is significantly impaired. ⚠ **WARNING** Risk of accident if steering capability is impaired If the steering does not function as intended, the vehicle's operating safety is jeopardized. ▶ Pull over and stop the vehicle safely as soon as possible, paying attention to road and traffic conditions. Do not continue driving under any circumstances. ▶ Consult a qualified specialist workshop. ▶ Stop the vehicle immediately in accordance with the traffic conditions. Do not continue driving under any circumstances. ▶ Consult a qualified specialist workshop.

Display messages	Possible causes/consequences and ▶ Solutions
Active Hood Malfunction See Operator's Manual	* The active hood (pedestrian protection) is malfunctioning or inoperative after having already been triggered. ▶ Consult a qualified specialist workshop.
	* At least one door is open. ▶ Close all doors.
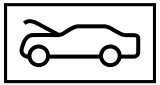	* The hood is open. ⚠ **WARNING** Risk of accident if the engine hood is unlatched while driving An unlocked engine hood may open up when the vehicle is in motion and block your view. ▶ Never unlatch the engine hood while driving. ▶ Before every trip, ensure that the engine hood is latched. ▶ Stop the vehicle immediately in accordance with the traffic conditions. ▶ Close the hood.
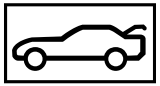	* The trunk lid is open. ⚠ **DANGER** Risk of exhaust gas poisoning Combustion engines emit poisonous exhaust gases such as carbon monoxide. Exhaust gases can enter the vehicle interior if the trunk lid is open when the engine is running, especially if the vehicle is in motion.

Display messages	Possible causes/consequences and ▶ Solutions
	▶ Always switch off the engine before opening the trunk lid. ▶ Never drive with the trunk lid open. ▶ Close the trunk lid.
 Check Washer Fluid	* The washer fluid level in the washer fluid reservoir has dropped below the minimum. ▶ Refill washer fluid (→ page 414).

Engine

Display messages	Possible causes/consequences and ▶ Solutions
 Check Coolant Level See Operator's Manual	* The coolant level is too low. ! **NOTE** Engine damage due to insufficient coolant ▶ Avoid long journeys with insufficient coolant. ▶ Add coolant (→ page 413). ▶ Have the engine cooling system checked at a qualified specialist workshop.

Display messages	Possible causes/consequences and ▶ Solutions
 Coolant Too Hot Stop Vehicle Turn Engine Off	* The coolant is too hot. ▶ Stop the vehicle immediately in accordance with the traffic conditions and switch off the engine. ⚠ **WARNING** Danger of burns when opening the hood If you open the hood when the engine has overheated or during a fire in the engine compartment, you could come into contact with hot gases or other escaping operating fluids. ▶ Before opening the hood, allow the engine to cool down. ▶ In the event of a fire in the engine compartment, keep the hood closed and call the fire service. ▶ Wait until the engine has cooled down. ▶ Make sure that the air supply to the radiator is not impaired. ▶ Avoiding high loads on the engine, drive to the nearest qualified specialist workshop. In doing so, ensure that the coolant temperature display remains below the red marking.
	* The fan motor is faulty. ▶ Avoiding high loads on the engine, drive to the nearest qualified specialist workshop. In doing so, ensure that the coolant temperature display remains below the red marking.
To switch engine off, press and hold Start/Stop button for at least 3 secs. or press 3 times.	* You have pressed the start/stop button while driving. ▶ Information about switching off the engine while driving (→ page 173).

Display messages	Possible causes/consequences and ▶ Solutions
Fuel Level Low	* The fuel supply has dropped into the reserve range. ▶ Refuel.
Gas Cap Loose	* The fuel filler cap is not closed correctly or the fuel system is leaking. ▶ Close the fuel filler cap. ▶ **If the fuel filler cap was already properly closed:** consult a qualified specialist workshop.

Transmission

Display messages	Possible causes/consequences and ▶ Solutions
Apply Brake to Shift from 'P'	* You have attempted to shift the transmission out of park position P and into another transmission position. ▶ Depress the brake pedal. ▶ Select transmission position D, R or neutral N.
To Deselect P or N, Depress Brake and Start Engine	* You have attempted to shift the transmission out of park position P or neutral N and into another transmission position. ▶ Depress the brake pedal.

Display messages	Possible causes/consequences and ▶ Solutions
	▶ Change the transmission position. ▶ Start the engine.
Only Shift to 'P' when Vehicle is Stationary	* Park position P can be engaged only when the vehicle is stationary. ▶ To stop, depress the brake pedal. ▶ Shift the transmission to park position P while the vehicle is stationary.
Apply Brake to Shift to 'R'	* You have attempted to select transmission position R. ▶ Depress the brake pedal. ▶ Select transmission position R.
Driver's Door Open & Transmission Not in P Risk of Vehicle Rolling Away	* The driver's door is not fully closed and transmission position D, R or neutral N is selected. ▶ Select park position P when switching off the vehicle.
Shift to 'P' or 'N' to Start Engine	* You have attempted to start the engine in transmission position D or R. ▶ Depress the brake pedal. ▶ Select park position P or neutral N. ▶ Start the engine.

Display messages	Possible causes/consequences and ▶ Solutions
P Shift to 'P'	* Park position P is to be engaged. ▶ Stop the vehicle. ▶ Depress the brake pedal. ▶ Engage park position P.
N Permanently Active Risk of Rolling Away	* While the vehicle is rolling or while you are driving, neutral N has been engaged. ▶ To stop, depress the brake pedal. ▶ Shift the transmission to park position P while the vehicle is stationary. ▶ To continue driving, select transmission position D or R.
Service Required Do Not Shift Gears Visit Dealer	* The transmission is malfunctioning. The transmission position can no longer be changed. ▶ When transmission position D is selected, consult a qualified specialist workshop and do not change the transmission position. ▶ For all other transmission positions, park the vehicle safely. ▶ Consult a qualified specialist workshop or breakdown service.
Reversing Not Possible Service Required	* The transmission is malfunctioning. The transmission position R cannot be selected. ▶ Consult a qualified specialist workshop.
Transmission Malfunction Stop	* The transmission is malfunctioning. The transmission shifts to neutral N automatically. ▶ Stop the vehicle immediately in accordance with the traffic conditions. ▶ Depress the brake pedal.

Display messages	Possible causes/consequences and ▶ Solutions
	▶ Engage park position P. ▶ Consult a qualified specialist workshop.
Stop Vehicle Leave Engine Running Wait Transmission Cooling	* The transmission is overheating. Pulling away may be temporarily impaired or not possible. ▶ Stop the vehicle immediately in accordance with the traffic conditions. Do not continue driving under any circumstances. ▶ Leave the engine running. ▶ Wait until the display message disappears before pulling away.
Auxiliary Battery Malfunction	* The auxiliary battery for the transmission is no longer being charged. ▶ Consult a qualified specialist workshop. ▶ Until then, always select park position P manually before you switch off the engine. ▶ Before leaving the vehicle, apply the electric parking brake.

Brakes

Display messages	Possible causes/consequences and ▶ Solutions
PARK (USA only) (Ⓟ) (Canada only) Parking Brake See Operator's Manual	* The yellow (Ⓟ) indicator lamp is lit. The electric parking brake is malfunctioning. **To apply:** ▶ Switch the ignition off and switch it back on. ▶ Apply the electric parking brake manually (→ page 198). If it is not possible to apply the electric parking brake: ▶ Consult a qualified specialist workshop. ▶ Where necessary, also secure the parked vehicle against rolling away. * The yellow (Ⓟ) indicator lamp and the red PARK (USA only) or (Ⓟ) (Canada only) indicator lamp are lit. The electric parking brake is malfunctioning. **To release:** ▶ Switch the ignition off and switch it back on. ▶ Release the electric parking brake manually (→ page 198). or ▶ Release the electric parking brake automatically (→ page 198). If it is still not possible to release the electric parking brake: ▶ Do not continue driving under any circumstances. Consult a qualified specialist workshop.

Display messages	Possible causes/consequences and ▶ Solutions
	* The yellow (P) indicator lamp is lit and the red PARK (USA only) or (P) (Canada only) indicator lamp is flashing. The electric parking brake is malfunctioning. The electric parking brake could not be applied or released. ▶ Switch the ignition off and switch it back on. **To apply:** ▶ Release and then apply the electric parking brake manually (→ page 198). **To release:** ▶ Apply and then release the electric parking brake manually. If the electric parking brake cannot be applied or the red PARK (USA only) or (P) (Canada only) indicator lamp continues to flash: ▶ Do not continue driving under any circumstances. Consult a qualified specialist workshop. ▶ Where necessary, also secure the parked vehicle against rolling away. * The yellow (P) indicator lamp is lit and the red PARK indicator lamp (USA only) or (P) indicator lamp (Canada only) flashes for approximately ten seconds after the electric parking brake has been applied or released. It then remains lit or goes out. The electric parking brake is malfunctioning. **If the battery charge level is too low:** ▶ Charge the battery.

Display messages	Possible causes/consequences and ▶ Solutions
	To apply: ▶ Switch off the ignition. The electric parking brake will be applied automatically. If the electric parking brake is not to be applied, e.g. at an automatic car wash or when the vehicle is being towed, leave the ignition switched on. This does not include having the vehicle towed with the rear axle raised. If the electric parking brake is not applied automatically: ▶ Switch the ignition off and switch it back on. ▶ Release and then apply the electric parking brake manually (→ page 198). If it is still not possible to apply the electric parking brake: ▶ Consult a qualified specialist workshop. ▶ Where necessary, also secure the parked vehicle against rolling away. **To release:** ▶ If the conditions for automatic release are fulfilled and the electric parking brake is not released automatically, release the electric parking brake manually (→ page 198). If it is still not possible to release the electric parking brake: ▶ Do not continue driving under any circumstances. Consult a qualified specialist workshop.

Display messages	Possible causes/consequences and ▶ Solutions
PARK (USA only) (P) (Canada only) Please Release Parking Brake	* The red PARK indicator lamp (USA only) or (P) indicator lamp (Canada only) is flashing. The electric parking brake is applied while you are driving: • A condition for automatic release of the electric parking brake has not been fulfilled (→ page 198). • You are performing emergency braking using the electric parking brake (→ page 199). ▶ Check the conditions for automatic release of the electric parking brake. ▶ Release the electric parking brake manually.

Display messages	Possible causes/consequences and ▶ Solutions
PARK (USA only) (P) (Canada only) Turn On the Ignition to Release the Parking Brake	* The red PARK (USA only) or (P) indicator lamp (Canada only) is lit. You have attempted to release the electric parking brake with the ignition switched off. ▶ Switch on the ignition.
BRAKE (USA only) (!) (Canada only) Check Brake Fluid Level	* There is insufficient brake fluid in the brake fluid reservoir. ⚠ **WARNING** Risk of an accident due to low brake fluid level If the brake fluid level is too low, the braking effect and the braking characteristics may be impaired. ▶ Pull over and stop the vehicle safely as soon as possible, paying attention to road and traffic conditions. Do not continue driving under any circumstances. ▶ Consult a qualified specialist workshop. ▶ Do not add brake fluid.

Display messages	Possible causes/consequences and ▶ Solutions
	▶ Stop the vehicle immediately in accordance with the traffic conditions. Do not continue driving under any circumstances. ▶ Do not add brake fluid. ▶ Consult a qualified specialist workshop.
 Check Brake Pads See Operator's Manual	* The brakepads have reached the wear limit. ⚠ **WARNING** Risk of accident due to restricted braking power When the brake pads have reached their wear limit, the braking power may be restricted. ▶ Drive on carefully. ▶ Have the brake system checked immediately at a qualified specialist workshop. ▶ Consult a qualified specialist workshop.

Driving systems

Display messages	Possible causes/consequences and ▶ Solutions
ATTENTION ASSIST Inoperative	* ATTENTION ASSIST is malfunctioning. ▶ Consult a qualified specialist workshop.
ATTENTION ASSIST: Take a Break!	* ATTENTION ASSIST has detected fatigue or an increasing lack of concentration on the part of the driver (→ page 250). ▶ If necessary, take a break.
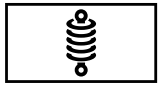 Malfunction Drive at Max. 50 mph	* AIRMATIC is functioning only to a limited extent. The vehicle's handling characteristics may be affected. **NOTE** The tires on the front axle or the fenders could be damaged by large steering movements ▶ Avoid large steering movements while driving and listen for scraping sounds. ▶ If you hear scraping sounds, pull over and stop the vehicle in accordance with the traffic conditions, and set a higher vehicle level if possible. ▶ Drive in a manner appropriate for the current level, but do not exceed 50 mph (80 km/h).

Display messages	Possible causes/consequences and ▶ Solutions
	▶ Consult a qualified specialist workshop. * ACTIVE BODY CONTROL is malfunctioning. The vehicle's handling characteristics may be affected. **NOTE** The tires on the front axle or the fenders could be damaged by large steering movements ▶ Avoid large steering movements while driving and listen for scraping sounds. ▶ If you hear scraping sounds, pull over and stop the vehicle in accordance with the traffic conditions, and set a higher vehicle level if possible. ▶ Do not drive at speeds greater than 50 mph (80 km/h). ▶ Consult a qualified specialist workshop.
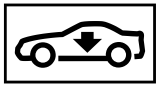 Lowering	* The vehicle level may be lowered for the following reasons: • You have selected a different drive program. • You have exceeded the speed limit. • You have changed the vehicle level by pressing the button.
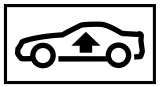 Vehicle Rising	* Your vehicle is adjusting to the level you have selected.
Drive More Slowly	* You are driving too fast for the selected vehicle level.

Display messages	Possible causes/consequences and ▶ Solutions
	▶ To adjust the vehicle level, you must not drive at speeds greater than 50 mph (80 km/h).
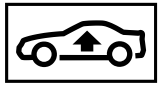 Stop Vehicle Vehicle Too Low	* You have pulled away despite the vehicle level being too low. ▶ Stop the vehicle in accordance with the traffic conditions. The vehicle will be raised to the selected vehicle level. ▶ Wait until the display message disappears before pulling away. If the display message does not disappear and a warning tone also sounds, AIRMATIC is malfunctioning: ▶ Do not drive at speeds greater than 50 mph (80 km/h) and consult a qualified specialist workshop immediately. ! **NOTE** The tires on the front axle or the fenders could be damaged by large steering movements ▶ Avoid large steering movements while driving and listen for scraping sounds. ▶ If you hear scraping sounds, pull over and stop the vehicle in accordance with the traffic conditions, and set a higher vehicle level if possible. ▶ Set a higher vehicle level (→ page 228). Depending on the malfunction, the vehicle will be raised.
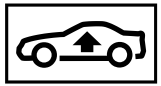 Vehicle Rising Please Wait	* The vehicle level is too low. The vehicle will be raised to the selected vehicle level. ▶ Wait until the display message disappears before pulling away.

Display messages	Possible causes/consequences and ▶ Solutions
Max. Speed 22 mph	* The vehicle has been set to transport level. Transport level is not a permissible driving level. Only suitable for transporting the vehicle. ▶ Do not drive at speeds greater than 22 mph (35 km/h).
ABC Malfunction Stop Vehicle	* ACTIVE BODY CONTROL is malfunctioning. ▶ Stop the vehicle immediately in accordance with the traffic conditions. Do not continue driving under any circumstances. ▶ Consult a qualified specialist workshop.
Road Surface Scan Inoperative	* ROAD SURFACE SCAN is malfunctioning. ▶ Drive on carefully. ▶ Consult a qualified specialist workshop.
ABC Vehicle Rising Please Wait Briefly	* The vehicle level is too low. The vehicle is raised to the selected vehicle level. ▶ Wait until the display message disappears before pulling away.

Display messages	Possible causes/consequences and ▶ Solutions
Active Steering Assist Currently Unavailable See Operator's Manual	* Active Steering Assist is temporarily unavailable. The ambient conditions are outside the system limits (→ page 219). ▶ Drive on. As soon as the ambient conditions are within the system limits, the system will become available again. ▶ If necessary, clean the windshield in the camera's field of vision. ▶ Check the tire pressure if necessary.
Active Steering Assist Inoperative	* Active Steering Assist is malfunctioning. Active Distance Assist DISTRONIC remains available. ▶ Consult a qualified specialist workshop.
	* Active Steering Assist has reached the system limits (→ page 219). You have not steered independently for a considerable period of time. ▶ Take over the steering and drive on in accordance with the traffic conditions.
Beginning Emergency Stop	* Your hands are not on the steering wheel. An emergency stop is initiated (→ page 222). ▶ Put your hands back on the steering wheel. You can cancel the deceleration at any time by performing one of the following actions: • Steering • Braking or accelerating • Pressing a steering-wheel button • Operating Touch Control

Display messages	Possible causes/consequences and ▶ Solutions
	• Deactivating Active Distance Assist DISTRONIC
Active Lane Keeping Assist Currently Unavailable See Operator's Manual	* Active Lane Keeping Assist is temporarily unavailable. The ambient conditions are outside the system limits (→ page 259). **Vehicles with Active Steering Assist:** The camera view may be limited by the windshield. ▶ Drive on. As soon as the ambient conditions are within the system limits, the system will become available again. **Vehicles with Active Steering Assist:** If the display message does not disappear: ▶ Stop the vehicle in accordance with the traffic conditions. ▶ Clean the windshield.
Active Lane Keeping Assist Inoperative	* Active Lane Keeping Assist is malfunctioning. ▶ Consult a qualified specialist workshop.
Active Lane Keeping Assist Camera View Restricted See Operator's Manual	* **Vehicles without Active Steering Assist:** the camera view is restricted. Possible causes are: • Dirt on the windshield in the camera's field of vision • Heavy rain, snow or fog Driving systems and driving safety systems may be malfunctioning or temporarily unavailable. Once the cause of the problem is no longer present, the driving systems and driving safety systems will be available again.

Display messages	Possible causes/consequences and ▶ Solutions
	If the display message does not disappear: ▶ Pull over and stop the vehicle safely as soon as possible, paying attention to road and traffic conditions. ▶ Clean the windshield.
Blind Spot Assist Currently Unavailable See Operator's Manual	* Blind Spot Assist is temporarily unavailable. The system limits have been reached (→ page 256). ▶ Drive on. Once the cause of the problem is no longer present, the system will be available again. or ▶ If the display message does not disappear, stop the vehicle in accordance with the traffic conditions and restart the engine. ▶ If necessary, clean the rear bumper. If the bumper is especially dirty, the sensors in the bumper may be malfunctioning.
Blind Spot Assist Inoperative	* Blind Spot Assist is malfunctioning. ▶ Consult a qualified specialist workshop.
Active Blind Spot Assist Currently Unavailable See Operator's Manual	* Active Blind Spot Assist is temporarily unavailable. The system limits have been reached (→ page 256). ▶ Drive on. Once the cause of the problem is no longer present, the system will be available again. or

Display messages	Possible causes/consequences and ▶ Solutions
	▶ If the display message does not disappear, stop the vehicle in accordance with the traffic conditions and restart the engine.
Active Blind Spot Assist Inoperative	* Active Blind Spot Assist is malfunctioning. ▶ Consult a qualified specialist workshop.
Active Parking Assist and PARKTRONIC Inoperative See Operator's Manual	* Active Parking Assist and Parking Assist PARKTRONIC are malfunctioning. ▶ Stop the vehicle in accordance with the traffic conditions and restart the engine. ▶ If the display message continues to be displayed, consult a qualified specialist workshop.
Traffic Sign Assist Currently Unavailable See Operator's Manual	* Traffic Sign Assist is temporarily unavailable. ▶ Drive on. Once the cause of the problem is no longer present, the system will be available again.
Traffic Sign Assist Inoperative	* Traffic Sign Assist is malfunctioning. ▶ Stop the vehicle in accordance with the traffic conditions and restart the engine. ▶ If the display message continues to be displayed, consult a qualified specialist workshop.
Traffic Sign Assist Camera View Restricted See Operator's Manual	* The camera view is restricted. Possible causes: • Dirt on the windshield in the camera's field of vision • Heavy rain, snow or fog Driving systems and driving safety systems may be malfunctioning or temporarily unavailable.

Display messages	Possible causes/consequences and ▶ Solutions
	Once the cause of the problem is no longer present, the driving systems and driving safety systems will be available again. If the display message does not disappear: ▶ Stop the vehicle in accordance with the traffic conditions. ▶ Clean the windshield.
HOLD Off	* The HOLD function is deactivated because the vehicle is slipping or a condition for activation is not fulfilled. ▶ Reactivate the HOLD function later or check the activation conditions for the HOLD function (→ page 225).
 - - - mph	* Active Distance Assist DISTRONIC cannot be activated as not all activation conditions are fulfilled. ▶ Comply with the activation conditions of Active Distance Assist DISTRONIC (→ page 214).
 Suspended	* If you depress the accelerator pedal beyond the Active Distance Assist DISTRONIC setting, the system will be put into passive mode (→ page 223).

Display messages	Possible causes/consequences and ▶ Solutions
 Off	* Active Distance Assist DISTRONIC was deactivated. If a warning tone also sounds, Active Distance Assist DISTRONIC has deactivated automatically (→ page 214).
Active Distance Assist Currently Unavailable See Operator's Manual	* Active Distance Assist DISTRONIC is temporarily unavailable. The ambient conditions are outside the system limits (→ page 212). ▶ Drive on. As soon as the ambient conditions are within the system limits, the system will become available again.
Active Distance Assist Inoperative	* Active Distance Assist DISTRONIC is malfunctioning. Other driving systems and driving safety systems may also be malfunctioning. ▶ Consult a qualified specialist workshop.
Active Distance Assist Now Available	* Active Distance Assist DISTRONIC is operational again and can be activated (→ page 214).
 - - - mph	* Cruise control cannot be activated as not all activation conditions are fulfilled. ▶ Observe the activation conditions for cruise control (→ page 211).
Cruise Control Inoperative	* Cruise control is malfunctioning.

Display messages	Possible causes/consequences and ▶ Solutions
	▶ Consult a qualified specialist workshop.
Cruise Control Off	* Cruise control has been deactivated. If there is an additional warning tone, cruise control has been deactivated automatically (→ page 210).

Driving safety systems

Display messages	Possible causes/consequences and ▶ Solutions
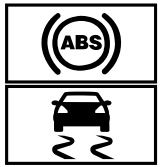 Currently Unavailable See Operator's Manual	* ABS and ESP® are temporarily unavailable. Other driving systems and driving safety systems may also be temporarily unavailable. The brake system will continue to operate normally. Braking distance may increase in an emergency braking situation. ⚠ **WARNING** Risk of skidding if ABS and ESP® are malfunctioning If ABS and ESP® are malfunctioning, the wheels could lock when braking and ESP® cannot carry out vehicle stabilization. The steering capability and braking characteristics are thus severely impaired. The braking distance in an emergency braking situation can increase. In addition, other driving safety systems are switched off. ▶ Drive on carefully. ▶ Have ABS and ESP® checked immediately at a qualified specialist workshop.

Display messages	Possible causes/consequences and ▶ Solutions
	▶ Drive carefully on a suitable stretch of road, making slight steering movements at a speed above 19 mph (30 km/h). ▶ If the display message does not disappear, consult a qualified specialist workshop immediately. Drive carefully.
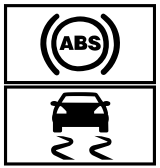 Inoperative See Operator's Manual	* ABS and ESP® are malfunctioning. Other driving systems and driving safety systems may also be malfunctioning. The brake system will continue to operate normally. Braking distance may increase in an emergency braking situation. ⚠ **WARNING** Risk of skidding if ABS and ESP® are malfunctioning If ABS and ESP® are malfunctioning, the wheels could lock when braking and ESP® cannot carry out vehicle stabilization. The steering capability and braking characteristics are thus severely impaired. The braking distance in an emergency braking situation can increase. In addition, other driving safety systems are switched off. ▶ Drive on carefully. ▶ Have ABS and ESP® checked immediately at a qualified specialist workshop. ▶ Drive on carefully. ▶ Consult a qualified specialist workshop immediately.

Display messages	Possible causes/consequences and ▶ Solutions
 Currently Unavailable See Operator's Manual	* ESP® is temporarily unavailable. Other driving systems and driving safety systems may also be malfunctioning. ⚠ **WARNING** Risk of skidding if ESP® is malfunctioning If ESP® is malfunctioning, ESP® cannot carry out vehicle stabilization. In addition, other driving safety systems are switched off. ▶ Drive on carefully. ▶ Have ESP® checked at a qualified specialist workshop. ▶ Drive carefully on a suitable stretch of road, making slight steering movements at a speed above 19 mph (30 km/h). ▶ If the display message does not disappear, consult a qualified specialist workshop immediately. Drive carefully.
 Inoperative See Operator's Manual	* ESP® is malfunctioning. Other driving systems and driving safety systems may also be malfunctioning. The brake system will continue to operate normally. Braking distance may increase in an emergency braking situation.

Display messages	Possible causes/consequences and ▶ Solutions
	⚠ **WARNING** Risk of skidding if ESP® is malfunctioning If ESP® is malfunctioning, ESP® cannot carry out vehicle stabilization. In addition, other driving safety systems are switched off. ▶ Drive on carefully. ▶ Have ESP® checked at a qualified specialist workshop. ▶ Drive on carefully. ▶ Consult a qualified specialist workshop immediately.
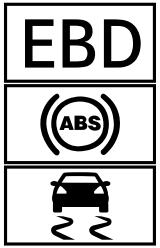 Inoperative See Operator's Manual	* EBD, ABS and ESP® are malfunctioning. Other driving systems and driving safety systems may also be malfunctioning. ⚠ **WARNING** Risk of skidding if EBD, ABS and ESP® are malfunctioning If EBD, ABS and ESP® are malfunctioning, the wheels can lock when braking and ESP® cannot carry out vehicle stabilization. The steering capability and braking characteristics are thus severely impaired. The braking distance in an emergency braking situation can increase. In addition, other driving safety systems are switched off. ▶ Drive on carefully. ▶ Have the brake system checked immediately at a qualified specialist workshop.

Display messages	Possible causes/consequences and ▶ Solutions
	▶ Drive on carefully. ▶ Consult a qualified specialist workshop immediately.
Active Brake Assist Functions Currently Limited See Operator's Manual	* **Vehicles with the Driving Assistance Package:** Active Brake Assist with cross-traffic function, Evasive Steering Assist or PRE-SAFE® PLUS are temporarily unavailable or only partially available. **Vehicles without the Driving Assistance Package:** Active Brake Assist is temporarily unavailable or only partially available. The ambient conditions are outside the system limits (→ page 205). ▶ Drive on. As soon as the ambient conditions are within the system limits, the system will become available again. ▶ If the display message does not disappear, stop the vehicle in accordance with the traffic conditions and restart the engine.
Active Brake Assist Functions Limited See Operator's Manual	* **Vehicles with Driving Assistance Package:** Active Brake Assist with cross-traffic function, Evasive Steering Assist or PRE-SAFE® PLUS is malfunctioning. **Vehicles without Driving Assistance Package:** Active Brake Assist is malfunctioning. ▶ Consult a qualified specialist workshop.
Radar Sensors Dirty See Operator's Manual	* The radar sensor system is malfunctioning. Possible causes: • Dirt on the sensors • Heavy rain or snow • Extended country driving without other traffic, e.g. in the desert

Display messages	Possible causes/consequences and ▶ Solutions
	Driving systems and driving safety systems may be malfunctioning or temporarily unavailable. Once the cause of the problem is no longer present, the driving systems and driving safety systems will be available again. If the display message does not disappear: ▶ Stop the vehicle in accordance with the traffic conditions. ▶ Clean all sensors (→ page 421). ▶ Restart the engine.

Mercedes me connect

Display messages	Possible causes/consequences and ▶ Solutions
Mercedes me connect Services Limited See Operator's Manual	* Service limited. At least one of the main functions of the Mercedes me connect system is malfunctioning. ▶ Observe the notes on the diagnostics connection (→ page 26). ▶ Consult a qualified specialist workshop.
SOS Inoperative	* At least one of the main functions of the Mercedes me connect system or of the SOS emergency call system is malfunctioning. ▶ Consult a qualified specialist workshop.

Battery

Display messages	Possible causes/consequences and ▶ Solutions
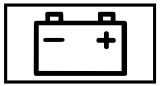 12 V Battery See Operator's Manual	* The engine is off and the charge level is too low. ▶ Switch off electrical consumers that are not required. To charge the battery: ▶ Leave the engine running for a few minutes, or drive an extended distance. * If the message appears while the engine is running, this indicates an on-board electrical system malfunction. ▶ Consult a qualified specialist workshop.
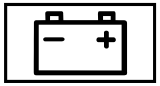 See Operator's Manual	* The battery is not being charged. ! **NOTE** Possible engine damage if you continue driving ▶ Do not continue driving under any circumstances. ▶ Consult a qualified specialist workshop. ▶ Pull over and stop the vehicle safely and switch off the engine, paying attention to road and traffic conditions. ▶ Consult a qualified specialist workshop.

Display messages	Possible causes/consequences and ▶ Solutions
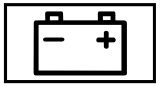 Stop Vehicle See Operator's Manual	* The battery is no longer being charged and the charge level is too low. **NOTE** Possible engine damage if you continue driving ▶ Do not continue driving under any circumstances. ▶ Consult a qualified specialist workshop. ▶ Stop the vehicle immediately in accordance with the traffic conditions. Do not continue driving under any circumstances. ▶ Switch off the engine. ▶ Consult a qualified specialist workshop.
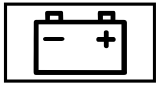 Stop Vehicle Leave Engine Running	* The battery charge level is too low. ▶ Stop the vehicle immediately in accordance with the traffic conditions. Do not continue driving under any circumstances. ▶ Leave the engine running. ▶ Wait until the display message disappears before pulling away. ▶ **If the display message does not disappear:** consult a qualified specialist workshop.

Tire pressure monitor

Display messages	Possible causes/consequences and ▶ Solutions
Tire Press. Monitor Currently Unavailable	* There is interference from a powerful radio signal source. As a result, no signals from the tire pressure sensors are being received. The tire pressure monitor is temporarily unavailable. ▶ Drive on. The tire pressure monitor will restart automatically as soon as the cause has been rectified.
Tire Press. Monitor Inoperative	* The tire pressure monitor is malfunctioning. ⚠ **WARNING** There is a risk of an accident if the tire pressure monitoring system is malfunctioning If the tire pressure monitoring system is malfunctioning, it is not able to issue a warning if there is pressure loss in one or more of the tires. Underinflated tires may, for example, impair the driving, steering and braking characteristics. ▶ Have the tire pressure monitoring system checked at a qualified specialist workshop. ▶ Consult a qualified specialist workshop.
Tire Pressure Monitor Inoperative No Wheel Sensors	* The wheels installed do not have suitable tire pressure sensors. The tire pressure monitor is deactivated. ▶ Install wheels with suitable tire pressure sensors.

Display messages	Possible causes/consequences and ▶ Solutions
Wheel Sensor(s) Missing	* There is no signal from the tire pressure sensor of one or more wheels. No pressure value is displayed for the affected tire. ▶ Have the faulty tire pressure sensor replaced at a qualified specialist workshop.
Check Tires	* The tire pressure in one or more tires has dropped significantly. The wheel position is displayed. ⚠ **WARNING** Risk of an accident due to insufficient tire pressure Tire pressures that are too low pose the following hazards: • The tires may burst, especially as the load and vehicle speed increase. • The tires may wear excessively and/or unevenly, which may greatly impair tire traction. • The driving characteristics, as well as steering and braking, may be greatly impaired. You could then lose control of the vehicle. ▶ Observe the recommended tire pressure. ▶ Adjust the tire pressure if necessary. ▶ Stop the vehicle in accordance with the traffic conditions. ▶ Check the tire pressure (→ page 448) and the tires.

Display messages	Possible causes/consequences and ▶ Solutions
Please Correct Tire Pressure	* The tire pressure is too low in at least one of the tires, or the difference in tire pressure between the individual wheels is too great. ▶ Check the tire pressure and add air, if necessary. ▶ When the tire pressure is correct, restart the tire pressure monitor (→ page 453).
Warning Tire Malfunction	* The tire pressure in one or more tires has dropped suddenly. The wheel position is displayed. ⚠ **WARNING** Risk of an accident from driving with a flat tire Flat tires are dangerous in the following ways: • The tires can overheat and cause a fire. • The driving characteristics, as well as steering and braking, may be greatly impaired. You could then lose control of the vehicle. ▶ Do not drive with a flat tire. ▶ Observe the notes on flat tires. Notes on flat tires (→ page 425). ▶ Stop the vehicle in accordance with the traffic conditions. ▶ Check the tires.

Display messages	Possible causes/consequences and ▶ Solutions
Tires Overheated	* At least one tire is overheating. The affected tires are displayed in red. At temperatures close to the limit value, the tires are displayed in yellow. ▶ Drive more slowly.
Decrease Speed	* At least one tire is overheating. The affected tires are displayed in red. At temperatures close to the limit value, the tires are displayed in yellow. ⚠ **WARNING** Risk of an accident from driving with overheated tires Overheated tires may burst, particularly at high speeds. ▶ Reduce speed so that the tires cool down. ▶ Reduce speed so that the tires cool down.

Engine oil

Display messages	Possible causes/consequences and ▶ Solutions
 Check Engine Oil At Next Refueling	* The engine oil level has dropped to the minimum level. ! **NOTE** Engine damage caused by driving with insufficient engine oil ▶ Avoid long journeys with insufficient engine oil.

Display messages	Possible causes/consequences and ▶ Solutions
	▶ Check the engine oil level when next refueling. Add engine oil (→ page 412). Notes on engine oil (→ page 484).
 Check Engine Oil Level (Add 1 quart)	* Display message only for certain engines: The engine oil level has dropped to the minimum level. ! **NOTE** Engine damage caused by driving with insufficient engine oil ▶ Avoid long journeys with insufficient engine oil. ▶ When next refueling, add 1.1 US qt (1 l) of engine oil (→ page 412). Notes on engine oil (→ page 484).
 Engine Oil Reduce Oil Level	* Display message only for certain engines: The engine oil level is too high. ! **NOTE** Engine damage caused by driving with excess engine oil ▶ Avoid long journeys with excess engine oil. ▶ Consult a qualified specialist workshop immediately and have the engine oil level reduced.

Display messages	Possible causes/consequences and ▶ Solutions
 Engine Oil Level Low Stop Vehicle Turn Engine Off	* Display message only for certain engines: The engine oil level is too low. **! NOTE** Engine damage caused by driving with insufficient engine oil ▶ Avoid long journeys with insufficient engine oil. ▶ Stop the vehicle immediately in accordance with the traffic conditions. Do not continue driving under any circumstances. ▶ Switch off the engine. ▶ Add 1.1 US qt (1 l) of engine oil (→ page 412). ▶ Check the engine oil level. Notes on engine oil (→ page 484).
 Engine Oil Pressure Stop Switch Off Engine	* Display message only for certain engines: The oil pressure is too low. **! NOTE** Engine damage caused by driving with insufficient oil pressure ▶ Avoid driving with insufficient oil pressure. ▶ Stop the vehicle immediately in accordance with the traffic conditions. Do not continue driving under any circumstances.

Display messages	Possible causes/consequences and ▶ Solutions
	▶ Consult a qualified specialist workshop.
Engine Oil Level Cannot Be Measured	* The electrical connection to the oil level sensor has been interrupted or the oil level sensor is faulty. ▶ Consult a qualified specialist workshop.

Warning and indicator lamps

Overview of indicator and warning lamps

Some systems will perform a self-test when the ignition is switched on. Some indicator and warning lamps may briefly light up or flash. This behavior is non-critical. These indicator and warning lamps indicate a malfunction only if they light up or flash after the engine has been started or during a journey.

Instrument Display

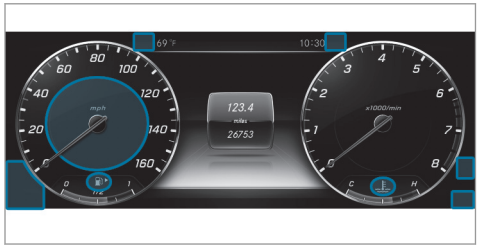

Depending on the display setting, the positions of the indicator lamps on the Instrument Display may differ from the example shown.

Progressive setting

If you select the progressive display setting, the positions of the indicator lamps on the Instrument Display will change.

Indicator and warning lamps:

- Low beam (→ page 150)
- Parking lamps (→ page 150)
- High beam (→ page 151)
- Turn signal light (→ page 151)
- Rear fog light (→ page 150)
- Restraint system (→ page 543)
- Seat belt not fastened (→ page 543)
- BRAKE USA: brakes (red) (→ page 548)
- Canada: brakes (red) (→ page 548)
- Electric parking brake (yellow) (→ page 548)
- PARK USA: electric parking brake applied (red) (→ page 548)
- Canada: electric parking brake applied (red) (→ page 548)
- ABS malfunction (→ page 551)
- ESP® (→ page 551)
- ESP® OFF (→ page 551)
- Distance warning (→ page 550)
- Electric power steering malfunction (→ page 544)
- AIRMATIC/Active Body Control malfunction (→ page 550)
- Check Engine (→ page 545)
- Electrical malfunction (→ page 545)
- Fuel reserve with fuel filler cap location indicator (→ page 545)
- Coolant too hot or cold (→ page 545)
- Tire pressure monitor (→ page 554)

Occupant safety

Warning/indicator lamp	Possible causes/consequences and ▶ Solutions
 Restraint system warning lamp	The red restraint system warning lamp is lit while the engine is running. *The restraint system is malfunctioning (→ page 34). ⚠ **WARNING** Risk of injury due to malfunctions in the restraint system If the restraint system is malfunctioning, restraint system components may be triggered unintentionally or may not deploy as intended during an accident. This may affect the Emergency Tensioning Devices or airbags, for example. ▶ Have the restraint system checked and repaired immediately at a qualified specialist workshop. ▶ Drive on carefully. ▶ Note the messages on the multifunction display. ▶ Consult a qualified specialist workshop immediately.
 Seat belt warning lamp flashes	The red seat belt warning lamp flashes and an intermittent warning tone sounds. * The driver or front passenger has not fastened their seat belt while the vehicle is in motion. ▶ Fasten your seat belt(→ page 39). * There are objects on the front passenger seat. ▶ Remove the objects from the front passenger seat.

Warning/indicator lamp	Possible causes/consequences and ▶ Solutions
 Seat belt warning lamp lights up	The red seat belt warning lamp will light up for six seconds once the engine has started. In addition, a warning tone may sound. *The seat belt warning lamp reminds the driver and front passenger to fasten their seat belts. ▶ Fasten your seat belt (→ page 39). If you have placed objects on the front passenger seat, the seat belt warning lamp may remain lit.

Vehicle

Warning/indicator lamp	Possible causes/consequences and ▶ Solutions
 Warning lamp for electric power steering	The red electric power steering warning lamp is lit while the engine is running. *The power-assisted steering or the steering itself is malfunctioning. ⚠ **WARNING** Risk of accident if steering capability is impaired If the steering does not function as intended, the vehicle's operating safety is jeopardized. ▶ Pull over and stop the vehicle safely as soon as possible, paying attention to road and traffic conditions. Do not continue driving under any circumstances. ▶ Consult a qualified specialist workshop. ▶ Note the messages on the multifunction display.

Engine

Warning/indicator lamp	Possible causes/consequences and ▶ Solutions
Coolant warning lamp	The red coolant warning lamp is lit while the engine is running. *Possible causes: • The temperature sensor is malfunctioning • Coolant level too low • The air supply to the radiator is obstructed • The radiator fan is faulty If there is an additional warning tone, the coolant temperature has exceeded the maximum permissible temperature. ⚠ **WARNING** Danger of burns when opening the hood If you open the hood when the engine has overheated or during a fire in the engine compartment, you could come into contact with hot gases or other escaping operating fluids. ▶ Before opening the hood, allow the engine to cool down. ▶ In the event of a fire in the engine compartment, keep the hood closed and call the fire service. ▶ Stop the vehicle immediately in accordance with the traffic conditions and switch off the engine. Do not continue driving under any circumstances. ▶ Note the messages on the multifunction display. If the coolant temperature display is at the lower end of the temperature scale:

Warning/indicator lamp	Possible causes/consequences and ▶ Solutions
	▶ Consult a qualified specialist workshop. or ▶ Exit the vehicle and keep a safe distance from it until the engine has cooled down. ▶ Check the coolant level (→ page 413). ▶ Make sure that the air supply to the radiator is not impaired. ▶ Avoiding high loads on the engine, drive to the nearest qualified specialist workshop. In doing so, ensure that the coolant temperature display remains below the red area.
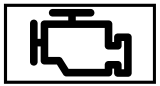 Engine diagnosis warning lamp	The yellow Check Engine warning lamp is lit while the engine is running. *A malfunction has occurred in the engine, the exhaust system or the fuel system. The emission limit values may be exceeded and the engine may be in emergency mode. In some states, legal requirements stipulate that you must immediately consult a qualified specialist workshop as soon as the yellow Check Engine warning lamp lights up. ▶ Have the vehicle checked as soon as possible at a qualified specialist workshop.
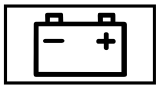 Electrical malfunction warning lamp	The red electrical malfunction warning lamp is lit. * There is a malfunction in the electrics. ▶ Observe the messages on the multifunction display.

Warning/indicator lamp	Possible causes/consequences and ▶ Solutions
Fuel reserve warning lamp	The yellow fuel reserve warning lamp lights up while driving. *There has been pressure loss in the fuel system. The fuel filler cap is not closed correctly or the fuel system is leaking. ▶ Close the fuel filler cap. If the fuel filler cap has already been closed correctly: ▶ Visit a qualified specialist workshop.
Fuel reserve warning lamp	The yellow fuel reserve warning lamp is lit while the engine is running. * The fuel supply has dropped into the reserve range. ▶ Refuel.

Brakes

Warning/indicator lamp	Possible causes/consequences and ▶ Solutions
PARK Red indicator lamp, electric parking brake applied (USA only) Red indicator lamp, electric parking brake applied (Canada only) Yellow electric parking brake indicator lamp is malfunctioning	The red electric parking brake indicator lamp flashes or is lit. The yellow indicator lamp is also lit if the electric parking brake malfunctions. * ▶ Observe the messages on the multifunction display.

Warning/indicator lamp	Possible causes/consequences and ▶ Solutions
BRAKE Brake warning lamp (USA) Brakes warning lamp (Canada)	The red brake system warning lamp is lit while the engine is running. *Possible causes: • The brake force boosting is malfunctioning and the braking characteristics may be affected. • There is insufficient brake fluid in the brake fluid reservoir. ⚠ **WARNING** Risk of accident and injury if brake force boosting is malfunctioning If brake force boosting is malfunctioning, increased brake pedal force may be necessary for braking. The braking characteristics may be impaired. The braking distance can increase in emergency braking situations. ▶ Stop in a safe location immediately. Do not continue driving. ▶ Consult a qualified specialist workshop. ⚠ **WARNING** Risk of an accident due to low brake fluid level If the brake fluid level is too low, the braking effect and the braking characteristics may be impaired. ▶ Pull over and stop the vehicle safely as soon as possible, paying attention to road and traffic conditions. Do not continue driving under any circumstances. ▶ Consult a qualified specialist workshop. ▶ Do not add brake fluid. ▶ Stop the vehicle immediately in accordance with the traffic conditions. Do not continue driving under any circumstances.

Warning/indicator lamp	Possible causes/consequences and ▶ Solutions
	▶ Note the messages on the multifunction display. ▶ Consult a qualified specialist workshop.

Driving systems

Warning/indicator lamp	Possible causes/consequences and ▶ Solutions
Warning lamp for distance warning function	The red distance warning lamp lights up while the vehicle is in motion. * The distance to the vehicle in front is too small for the speed selected. If there is an additional warning tone, you are approaching an obstacle at too high a speed. ▶ Be prepared to brake immediately. ▶ Increase the distance. Function of Active Brake Assist (→ page 205).
Suspension warning lamp	The yellow AIRMATIC/Active Body Control warning lamp is lit. * A malfunction has occurred with AIRMATIC/Active Body Control. ▶ Note the messages on the multifunction display.

Driving safety systems

Warning/indicator lamp	Possible causes/consequences and ▶ Solutions
ABS warning lamp	The yellow ABS warning lamp is lit while the engine is running. *ABS is malfunctioning. If there is an additional warning tone, EBD is malfunctioning. Other driving systems and driving safety systems may also be malfunctioning. ⚠ **WARNING** There is a risk of skidding if EBD or ABS is malfunctioning If EBD or ABS is malfunctioning, the wheels may lock when braking. The steering capability and braking characteristics are thus severely impaired. The braking distance in an emergency braking situation can increase. In addition, other driving safety systems are switched off. ▶ Drive on carefully. ▶ Have the brake system checked immediately at a qualified specialist workshop. ▶ Drive on carefully. ▶ Note the messages on the multifunction display. ▶ Visit a qualified specialist workshop.

Warning/indicator lamp	Possible causes/consequences and ▶ Solutions
 ESP® warning lamp flashes	The yellow ESP® warning lamp flashes while the vehicle is in motion. * One or more wheels has reached its grip limit (→ page 202). ▶ Adapt your driving style to suit the road and weather conditions.
 ESP® warning lamp lights up	The yellow ESP® warning lamp is lit while the engine is running. *ESP® is malfunctioning. Other driving systems and driving safety systems may also be malfunctioning. ⚠ **WARNING** Risk of skidding if ESP® is malfunctioning If ESP® is malfunctioning, ESP® cannot carry out vehicle stabilization. In addition, other driving safety systems are switched off. ▶ Drive on carefully. ▶ Have ESP® checked at a qualified specialist workshop. ▶ Drive on carefully. ▶ Note the messages on the multifunction display. ▶ Consult a qualified specialist workshop.

Warning/indicator lamp	Possible causes/consequences and ▶ Solutions
 ESP® OFF warning lamp	The yellow ESP® OFF warning lamp is lit while the engine is running. *ESP® is deactivated. ⚠ **WARNING** Risk of skidding when driving with ESP® deactivated If ESP® is deactivated, ESP® cannot carry out vehicle stabilization. The availability of further driving safety systems is also limited. ▶ Drive on carefully. ▶ Only deactivate ESP® for as long as the situation requires. If ESP® cannot be activated, ESP® is malfunctioning. ▶ Have ESP® checked immediately at a qualified specialist workshop. ▶ Observe the notes on deactivating ESP® (→ page 202).

Tire pressure monitor

Warning/indicator lamp	Possible causes/consequences and ▶ Solutions
 Tire pressure monitoring system warning lamp flashes	The yellow tire pressure monitoring system warning lamp (pressure loss/malfunction) flashes for approximately one minute and then remains lit. *The tire pressure monitoring system is defective. ⚠ **WARNING** There is a risk of an accident if the tire pressure monitoring system is malfunctioning If the tire pressure monitoring system is malfunctioning, it is not able to issue a warning if there is pressure loss in one or more of the tires. Underinflated tires may, for example, impair the driving, steering and braking characteristics. ▶ Have the tire pressure monitoring system checked at a qualified specialist workshop. ▶ Visit a qualified specialist workshop.
 Tire pressure monitoring system warning lamp lights up	The yellow tire pressure monitoring system warning lamp (pressure loss/malfunction) is lit. *The tire pressure monitoring system has detected tire pressure loss in at least one of the tires. ⚠ **WARNING** Risk of an accident due to insufficient tire pressure Tire pressures that are too low pose the following hazards: • The tires may burst, especially as the load and vehicle speed increase. • The tires may wear excessively and/or unevenly, which may greatly impair tire traction.

Warning/indicator lamp	Possible causes/consequences and ▶ Solutions
	• The driving characteristics, as well as steering and braking, may be greatly impaired. You could then lose control of the vehicle. ▶ Observe the recommended tire pressure. ▶ Adjust the tire pressure if necessary. ▶ Stop the vehicle, paying attention to road and traffic conditions. ▶ Check the tire pressure and the tires.

1, 2, 3 ...

4MATIC 188
Function 188

12 V battery
see Battery (vehicle)

115 V socket
see Socket (115 V)

360° Camera 241
Function 241
Opening the camera cover (rear view camera) 243
Selecting a view 243
Setting favorites 243

A

A/C function
Activating/deactivating (multimedia system) 165
Switching on/off (control panel) 165

ABS (Anti-lock Braking System) 201

Acceleration
see Kickdown

Accident and breakdown management
Mercedes me connect 358

Acoustic locking verification signal
Activating/deactivating 65

Activating/deactivating automatic volume adjustment
Burmester® surround sound system ... 388

Active Blind Spot Assist 256
Activating/deactivating 258
Brake application 257
Function 256
System limitations 256

Active Brake Assist
Function/notes 205
Setting 209

Active Distance Assist DISTRONIC 212
Active Emergency Stop Assist 222
Active Lane Change Assist 221
Calling up a speed 214
Displays in the Instrument Display 223
Function 212
Increasing/decreasing speed 214
Requirements 214
Route-based speed adaptation 217
Steering wheel buttons 214
Storing a speed 214
Switching off/deactivating 214
Switching on/activating 214
System limitations 212

Active Emergency Stop Assist 222

Active hood (pedestrian protection) 408
Method of operation 408
Resetting 408

Active Lane Change Assist 221
Activating/deactivating 222
Function 221

Active Lane Keeping Assist 259
Activating/deactivating 261
Activating/deactivating the warning ... 262
Function 259
Setting the sensitivity 262
System limits 259

Active Parking Assist 244
Cross Traffic Alert 249
Drive Away Assist 248
Exiting a parking space 247
Function 244

Maneuvering assistance 249
Parking 245
System limitations 244

Active Service System PLUS
see ASSYST PLUS

Active Speed Limit Assist 216
Display 216
Function 216

Active Steering Assist 219
Activating/deactivating 220
Active Emergency Stop Assist 222
Active Lane Change Assist 221
Displays in the Instrument Display 223
Function 219
System limitations 219

Adaptive cruise control
see Active Distance Assist DISTRONIC

Adaptive Highbeam Assist
Function 153
Switching on/off 154

Additional value range
Setting display content 266

Additives 484
Engine oil 484
Fuel 484

Additives (engine oil)
see Additives

Additives (fuel)
see Fuel

Address book
see Contacts

Adjusting the balance/fader
Burmester® high-end 3D surround sound system 389
Burmester® surround sound system ... 388

Adjusting the bass, mid-range and treble
Burmester® high-end 3D surround sound system 388
Burmester® surround sound system ... 388

Adjusting the mid-range, treble and bass
Burmester® high-end 3D surround sound system 388
Burmester® surround sound system ... 388

Adjusting the sound focus
Burmester® surround sound system ... 388

Adjusting the sound optimization
Burmester® high-end 3D surround sound system 389

Adjusting treble, mid-range and bass settings
Burmester® high-end 3D surround sound system 388
Burmester® surround sound system ... 388

ADS PLUS damping system
see AIRMATIC

After-sales service center
see ASSYST PLUS

Air bag
Reduced protection 43

Air distribution
Setting (multimedia system) 166

Air freshener system
see Perfume atomizer

Air inlet
see Air-water duct

Air pressure
see Tire pressure
Air suspension
see AIRMATIC
Air vents 170
Adjusting (front) 170
Adjusting (rear) 170
Glove box 171
Air vents
see Air vents
Air-recirculation mode 167
Air-water duct 415
Keeping free 415
Airbag 40
Activation 34
Belt airbag 38
Cushionbag 40
Front airbag (driver, front passenger) 40
Installation locations 40
Knee airbag 40
Overview 40
PASSENGER AIR BAG indicator lamp 45
Protection 42
Side airbag 40
Window curtain airbag 40
AIRMATIC 226
Setting 228
Suspension 226
Alarm
see Panic alarm
Alarm system
see ATA (anti-theft alarm system)
All-wheel drive
see 4MATIC
Alternative route
see Route
Ambient lighting
Setting (multimedia system) 156
Android Auto 353
Connecting a mobile phone 354
Ending 354
Information 354
Overview 353
Sound settings 354
Transferred vehicle data 355
Animals
Pets in the vehicle 63
Anti-lock braking system
see ABS (Anti-lock Braking System)
Anti-skid chains
see Snow chains
Anti-theft alarm system
see ATA (anti-theft alarm system)
Anti-theft protection
Immobilizer 92
Anticipatory occupant protection
see PRE-SAFE® (anticipatory occupant protection)
see PRE-SAFE® PLUS (anticipatory occupant protection plus)
Apple CarPlay® 351
Connecting an iPhone® 352
Ending 353
Notes 352
Overview 351
Sound settings 353
Transferred vehicle data 355
Ashtray
Front center console 138
Rear door 139

Assistance
Menu (on-board computer) 268
Assistance systems
see Driving safety system
ASSYST PLUS 407
Battery disconnection periods 408
Displaying the service due date 407
Function/notes 407
Regular maintenance work 407
Special service requirements 407
ATA (anti-theft alarm system) 93
Activating/deactivating the interior motion sensor 95
Arming/disarming the tow-away alarm 94
Deactivating the alarm 93
Function 93
Function of the interior motion sensor .. 94
The tow-away alarm function 94
ATTENTION ASSIST 250, 251
Function 250
Setting 251
System limitations 250
Attention assistant
see ATTENTION ASSIST
Audio mode
Activating media mode 369
Connecting USB devices 370
Copyrights 369
Information 367
Inserting/removing an SD card 369
Media search 374
Overview 370
Pause and playback function 371
Selecting a track 371
Selecting playback options 371
Track list 371
Authorized Mercedes-Benz Center
see Qualified specialist workshop
Authorized workshop
see Qualified specialist workshop
Automatic activation
Switching on/off 255
Automatic distance control
see Active Distance Assist DISTRONIC
Automatic driving lights 151
Automatic engine start (ECO start/stop function) 180
Automatic engine stop (ECO start/stop function) 180
Automatic front passenger front air-bag shutoff 44, 45
Function of the automatic front passenger front airbag shutoff 44
PASSENGER AIR BAG indicator lamp 45
Automatic front passenger front air-bag shutoff
see Automatic front passenger front airbag shutoff
Automatic lateral support adjustment
Setting 114
Automatic mirror folding function
Activating/deactivating 162
Automatic transmission
DIRECT SELECT lever 184
Drive program display 183
Engaging drive position 186
Engaging neutral 185
Engaging park position 186
Engaging reverse gear 185

Kickdown 188
Manual gearshifting 186
Steering wheel paddle shifters 186
Transmission position display 184
Transmission positions 184

B

BAS (Brake Assist System) 202

Battery
Charging (Remote Online) 174
SmartKey 66

Battery
see Battery (vehicle)

Battery (vehicle) 436
Charging 435
Charging (Remote Online) 174
Notes 431
Notes (starting assistance and charging) 433
Replacing 436
Starting assistance 435

Belt
see Seat belt

Belt airbag
Activation 34
Function/notes 38

Blind Spot Assist 256
Activating/deactivating 258
Function 256
System limitations 256

Blu-ray drive (Rear Seat Entertainment System)
Overview 395

Blu-ray/DVD mode
Selecting a film or track (Rear Seat Entertainment System) 405

Bluetooth® 303
Activating/deactivating 303
Information 302

Bluetooth® audio
Activating 378
De-authorizing (de-registering) the device 379
Information 376
Overview 377
Searching for a track 379
Searching for and authorizing the device 377
Selecting a media player 378
Switching device via NFC 379

Brake Assist System
see BAS (Brake Assist System)

Brake fluid
Notes 486

Brake force distribution
EBD (electronic brake force distribution) 205

Brakes
ABS (Anti-lock Braking System) 201
Active Brake Assist 205
BAS (Brake Assist System) 202
Driving tips 177
EBD (electronic brake force distribution) 205
HOLD function 225
Limited braking effect (salt-treated roads) 177
New/replaced brakepads/brake discs 175
Notes on breaking-in a new vehicle 175

Braking assistance
see BAS (Brake Assist System)

Breakdown
Changing a wheel 471
Overview of the help functions 18
Roadside Assistance 23
Tow-starting 442
Towing away 438
Transporting the vehicle 439

Breakdown
see Flat tire

Burmester® high-end 3D surround sound system
Adjusting the balance/fader 389
Adjusting the sound optimization 389
Adjusting treble, mid-range and bass settings 388
Automatic volume adjustment 389
Calling up the sound menu 388
Information 388
Selecting the sound profile 389

Burmester® surround sound system 387
Adjusting the balance/fader 388
Adjusting the sound focus 388
Adjusting treble, mid-range and bass settings 388
Automatic volume adjustment 388
Calls up the sound menu 387
Information 387
Switching the surround sound on/off 388

Buttons
Steering wheel 264

C

Call list
Making a call 349
Overview 348

Calling up the sound menu
Burmester® high-end 3D surround sound system 388

Calls 345
Accepting 345
Activating functions during a call 345
Calls with several participants 345
Declining 345
Ending a call 345
Incoming call during an existing call 346
Making 345
Mercedes me 355

Calls up the sound menu
Burmester® surround sound system 387

Camera
see 360° Camera
see Rear view camera

Car key
see SmartKey

Car wash
see Care

Car wash (care) 415

Care 422
Air-water duct 415
Automatic car wash 415
Carpet 422
Decorative foil 418
Display 422
EASY-PACK trunk box 422
Exterior lighting 421
Headliner 422
Matte finish 417
Night View Assist 420
Paintwork 417

Plastic trim 422
Power washer 416
Real wood/trim elements 422
Rear view camera 421
Seat belts 422
Seat cover 422
Sensors 421
Tailpipes 421
Washing by hand 416
Wheels/rims 421
Windows 421
Wiper blades 421

Carpet (Care) 422

Champagne glass 135

Change of address 23

Change of ownership 23

Changing a wheel
Preparation 471
Raising the vehicle 472

Changing a wheel
see Emergency spare wheel

Changing gears 186
Manually 186

Changing hub caps 471

Character entry
On the touchpad 299
Using the controller 299

Charging
Battery (vehicle) 435
Mobile phone (wireless) 145
USB port 143

Chassis level (MAGIC BODY CONTROL)
Setting 232

Chauffeur mode 103
Fully reclined position 108
Information 103
Installing/removing head restraint 106
Moving the front passenger seat into the chauffeur position 104
Moving the front passenger seat into the normal position 107

Child safety lock
Rear door 61
Rear side windows 63
Switching on/off (Rear Seat Entertainment System) 306

Child seat
Attaching (notes) 54
Basic instructions 49
Front-passenger seat (notes) 60
LATCH-type (ISOFIX) (installing) 55
Notes on risks and dangers 50
Securing on the front passenger seat 60
Securing on the rear seat 59
Top Tether 57

Children
Avoiding dangers in the vehicle 50
Basic instructions 49
Special seat belt retractor 55

Chock 470
Storage location 470

Chock
see Chock

Cigarette lighter
Front center console 139
Rear passenger compartment 139

Cleaning
see Care

Climate control
Activating/deactivating the A/C function (control panel) 165
Activating/deactivating the A/C function (multimedia system) 165
Activating/deactivating the synchronization function (multimedia system) 167
Air distribution settings 166
Air-recirculation mode 167
Automatic control (front) 165
Automatic control (rear passenger compartment) 166
Climate style function 166
Control panel for 3-zone automatic climate control 164
Filling capacity for PAG oil 489
Front air vents 170
Glove box air vent 171
Inserting/removing the flacon (fragrance system) 168
Ionization 168
Note 164
Rear air vents 170
Rear operating unit 164
Rear passenger compartment residual heat 168
Refrigerant 488
Refrigerant filling capacity 489
Removing condensation from the windows 167
Residual heat in the front compartment 168
Setting rear climate control (multimedia system) 167
Setting the climate style 166
Setting the fragrance system 168
Switching on/off (front) 165
Switching on/off (rear passenger compartment) 165
Ventilating the vehicle (convenience opening) 81
Windshield heater 169

Climate style
Function 166
Setting 166

Cockpit 6
Overview 6

Coffee cup symbol
see ATTENTION ASSIST

COMAND
see Multimedia system

COMAND Touch
Managing devices 305

Combination switch 151

Compass 338

Computer
see On-board computer

Connection status
Displaying 363
Overview 363

Connectivity
Switching transmission of the vehicle position on/off 302

Contacts 346
Calling up 347
Deleting 348
Downloading (from mobile phone) 346
Importing 347
Importing (overview) 347
Information 346
Making a call 348
Name format 347

Options 348
Storing 348
Controller
Operating 293
Convenience closing feature 81
Convenience opening 81
Coolant (engine)
Capacity 487
Check level 413
Notes 486
Copyrights
License 32
Trademarks 32
Cornering light function 153
Cover
see Side windows
Cross Traffic Alert 249
Crosswind Assist
Function/notes 204
Crosswind Assist
see MAGIC BODY CONTROL
Cruise control 210
Buttons 211
Calling up a speed 211
Function 210
Requirements: 211
Selecting 211
Setting a speed 211
Storing a speed 211
Switching off 211
Switching on 211
System limitations 210
Cup holder 135
Installing/removing (center console) ... 135
Rear passenger compartment (vehicles with a rear bench seat) 136
Rear passenger compartment (vehicles with electrically adjustable rear seats) 136
Removing/installing the insert (vehicles with electrically adjustable rear seats) 137
Switching the cooling/heating function on/off 138
Cushionbag 40
Customer Assistance Center (CAC) 27
Customer Relations Department 27

D

Damage detection (parked vehicle) 199
Dashboard
see Cockpit
Dashboard lighting
see Instrument cluster lighting
Data acquisition
Vehicle 28
Data import/export 307
Function/notes 307
Importing/exporting 307
Data storage
Electronic control units 28
Online services 30
Vehicle 28
Date
Setting the time and date automatically 301
Daytime running lamp mode
see Daytime running lights

Daytime running lights 154
Switching on/off 154
Deactivating the alarm (ATA) 93
Dealership
see Qualified specialist workshop
Declaration of conformity
Wireless vehicle components 25
Decorative foil (cleaning instructions) .. 418
Definitions (tires and loading) 464
Designs
Menu (on-board computer) 266
Destination 329
Editing intermediate destinations 319
Editing the previous destinations 329
External 330
Saving (current vehicle position) 329
Saving as global favorite 329
Storing a map position 329
Destination entry 315
Entering a 3 word address 320
Entering a POI or address 315
Entering an intermediate destination ... 319
Entering geo-coordinates 320
Selecting a contact 320
Selecting a POI 318
Selecting from the map 321
Selecting previous destinations 317
Detecting inattentiveness
see ATTENTION ASSIST
Diagnostics connection 26
Digital Operator's Manual 20
Digital speedometer 269
Dinghy towing
see Tow-bar system
DIRECT SELECT lever 184
Engaging drive position 186
Engaging neutral 185
Engaging park position 186
Engaging park position automatically .. 186
Engaging reverse gear 185
Function 184
Display (Care) 422
Display (multimedia system)
Settings 300
Display (on-board computer)
Displays on the multifunction display .. 267
Display content
Setting the additional value range 266
Display message 492
Calling up (on-board computer) 492
Notes 492
Display messages
--- mph 526
--- mph 525
12 V Battery See Operator's Manual 533
ABC Vehicle Rising Please Wait Briefly 520
Active Headlamps Inoperative 499
ATTENTION ASSIST Inoperative .. 517
ATTENTION ASSIST: Take a Break! 517
Automatic Headlamp Mode Inoperative 499
BRAKE Check Brake Fluid Level 515
Check Brake Pads See Operator's Manual 516

Check Coolant Level See Operator's Manual 505
Check Engine Oil At Next Refueling 538
Check Engine Oil Level (Add 1 quart) 539
Check Left Low Beam (example) 498
Check Tires 536
Check Washer Fluid 505
Coolant Too Hot Stop Vehicle Turn Engine Off 506
Currently Unavailable See Operator's Manual 527
Currently Unavailable See Operator's Manual 529
Don't Forget Your Key 498
Engine Oil Level Cannot Be Measured 541
Engine Oil Level Low Stop Vehicle Turn Engine Off 540
Engine Oil Pressure Stop Switch Off Engine 540
Engine Oil Reduce Oil Level 539
Front Left Malfunction Service Required (example) 493
Fuel Level Low 507
Gas Cap Loose 507
Inoperative See Operator's Manual 528
Inoperative See Operator's Manual 529
EBD Inoperative See Operator's Manual 530
SOS Inoperative 532
Intell. Light System Inoperative 500
Key Not Detected (red display message) 497
Key Not Detected (white display message) 497
Left Side Curtain Airbag Malfunction Service Required (example) ... 494
Lowering 518
Malfunction Drive at Max. 50 mph 517
Malfunction See Operator’s Manual 499
Max. Speed 22 mph 520
Obtain a New Key 496
Off 526
HOLD Off 525
PARK Parking Brake See Operator's Manual 511
Please Correct Tire Pressure 537
PARK Please Release Parking Brake 514
Replace Key Battery 497
See Operator's Manual 533
P Shift to 'P' 509

SRS Malfunction Service Required 493
Steering Malfunction Increased Physical Effort See Operator's Manual 503
Steering Malfunction Stop Immediately See Operator's Manual ... 503
Stop Vehicle Leave Engine Running 534
Stop Vehicle See Operator's Manual 534
Stop Vehicle Vehicle Too Low 519
Suspended 525
Switch Off Lights 500
Switch On Headlamps 499
PARK Turn On the Ignition to Release the Parking Brake 515
Vehicle Ready to Drive Switch the Ignition Off Before Exiting 502
Vehicle Rising Please Wait 519
Vehicle Rising 518
Warning Tire Malfunction 537
Wheel Sensor(s) Missing 536
ABC Malfunction Stop Vehicle 520
Active Blind Spot Assist Currently Unavailable See Operator's Manual 523
Active Blind Spot Assist Inoperative 524
Active Brake Assist Functions Currently Limited See Operator's Manual 531
Active Brake Assist Functions Limited See Operator's Manual 531
Active Distance Assist Currently Unavailable See Operator's Manual 526
Active Distance Assist Inoperative 526
Active Distance Assist Now Available 526
Active Hood Malfunction See Operator's Manual 504
Active Lane Keeping Assist Camera View Restricted See Operator's Manual 522
Active Lane Keeping Assist Currently Unavailable See Operator's Manual 522
Active Lane Keeping Assist Inoperative 522
Active Parking Assist and PARKTRONIC Inoperative See Operator's Manual 524
Active Steering Assist Currently Unavailable See Operator's Manual 521
Active Steering Assist Inoperative 521
Adaptive Highbeam Assist Camera View Restricted See Operator's Manual 500
Adaptive Highbeam Assist Currently Unavailable See Operator's Manual 500
Adaptive Highbeam Assist Inoperative 500

Air Conditioning Malfunction See Operator's Manual 501
Apply Brake to Shift from 'P' 507
Apply Brake to Shift to 'R' 508
Auxiliary Battery Malfunction 510
Beginning Emergency Stop 521
Blind Spot Assist Currently Unavailable See Operator's Manual 523
Blind Spot Assist Inoperative 523
Cruise Control Inoperative 526
Cruise Control Off 527
Decrease Speed 538
Drive More Slowly 518
Driver's Door Open & Transmission Not in P Risk of Vehicle Rolling Away .. 508
Front Passenger Airbag Disabled See Operator's Manual 494
Front Passenger Airbag Enabled See Operator's Manual 495
Hazard Warning Flashers Malfunctioning 501
Let fresh air into the vehicle interior. Air Conditioning Malf. Visit Workshop 501
Mercedes me connect Services Limited See Operator's Manual 532
N Permanently Active Risk of Rolling Away 509
Only Shift to 'P' when Vehicle is Stationary 508
Place the Key in the Marked Space See Operator's Manual 498
PRE-SAFE Inoperative See Operator's Manual 496
Radar Sensors Dirty See Operator's Manual 531
Reversing Not Possible Service Required 509
Road Surface Scan Inoperative 520
Service Required Do Not Shift Gears Visit Dealer 509
Shift to 'P' or 'N' to Start Engine 508
Stop Vehicle Leave Engine Running Wait Transmission Cooling 510
Tire Press. Monitor Currently Unavailable 535
Tire Press. Monitor Inoperative 535
Tire Pressure Monitor Inoperative No Wheel Sensors 535
Tires Overheated 538
To Deselect P or N, Depress Brake and Start Engine 507
To switch engine off, press and hold Start/Stop button for at least 3 secs. or press 3 times. 506
Traffic Sign Assist Camera View Restricted See Operator's Manual 524
Traffic Sign Assist Currently Unavailable See Operator's Manual 524

Traffic Sign Assist Inoperative 524
Transmission Malfunction Stop 509

Display on the windshield
see Head-up Display

Distance control
see Active Distance Assist DISTRONIC

Distance recorder
see Trip distance

DISTRONIC
see Active Distance Assist DISTRONIC

Door
Child safety lock (rear door) 61
Locking (emergency key) 72
Opening (from the inside) 69
Power closing function 72
Unlocking (emergency key) 72
Unlocking (from the inside) 69

Door control panel 14

Door control panel (rear passenger compartment) 16

DOT, Tire Identification Number (TIN) ... 460

Drawbar
see Tow-bar system

Drinking and driving 177

Drinks holder
see Cup holder

Drive Away Assist 248

Drive position
Inserting 186

Drive program display 183

Driver's seat
see Seat

Driving lights
see Automatic driving lights

Driving safety system 200
ABS (Anti-lock Braking System) 201
Active Brake Assist 205
BAS (Brake Assist System) 202
EBD (electronic brake force distribution) 205
ESP® Crosswind Assist 204
Overview 201
Radar and ultrasonic sensors 200
Responsibility 200
STEER CONTROL 205

Driving system
see 360° Camera
see Active Blind Spot Assist
see Active Distance Assist DISTRONIC
see Active Emergency Stop Assist
see Active Lane Change Assist
see Active Lane Keeping Assist
see Active Parking Assist
see Active Speed Limit Assist
see Active Steering Assist
see AIRMATIC
see ATTENTION ASSIST
see Blind Spot Assist
see Cruise control
see Driving safety system
see HOLD function
see MAGIC BODY CONTROL
see Night View Assist
see Parking Assist PARKTRONIC
see Rear view camera
see Traffic Sign Assist

Driving tips
Drinking and driving 177
General driving tips 177

Notes on breaking-in a new vehicle 175
Drowsiness detection
see ATTENTION ASSIST
Dynamic handling control system
see ESP® (Electronic Stability Program)
DYNAMIC SELECT
Configuring drive program I 184
Displaying engine data 184
Displaying vehicle data 184
Drive program display 183
Operating (DYNAMIC SELECT switch) 183
Selecting the drive program 183
Showing operation feedback 184

E

E10 483
Easy entry feature
Function/notes 118
Setting 119
Easy exit feature
Function/notes 118
Setting 119
EASY-PACK trunk box 132
Adjusting the height to any position 131
Care 422
Installing/removing 132
EBD (electronic brake force distribution)
Function/notes 205
ECO display
Function 182
Resetting 270
ECO start/stop function 180
Automatic engine start 180
Automatic engine stop 180
Method of operation 180
Switching off/on 181
Electric parking brake 197
Applying automatically 197
Applying or releasing manually 198
Emergency braking 199
Releasing automatically 198
Electronic Stability Program
see ESP® (Electronic Stability Program)
Electronics 478
Emergency
Overview of the help functions 18
Reflective safety vest 425
Emergency braking 199
Emergency braking
see BAS (Brake Assist System)
Emergency call system
see Mercedes-Benz emergency call system
Emergency engine start 442
Emergency key
Locking a door 72
Unlocking a door 72
Emergency operation mode
Starting the vehicle 173
Emergency release
Trunk lid (from inside) 78
Emergency spare wheel 477
Notes 477
Emergency Tensioning Devices
Activation 34
ENERGIZING COMFORT
Overview of programs 312
Starting the program 313

Engine
ECO start/stop function 180
Engine number 480
Starting (emergency operation mode) 173
Starting (Remote Online) 175
Starting (start/stop button) 173
Starting assistance 435
Switching off (start/stop button) 191

Engine data
Displaying 184

Engine number 480

Engine oil 412
Additives 484
Capacity 485
Checking the oil level using the oil dipstick 411
Checking the oil level using the on-board computer 411
MB-Freigabe or MB-Approval 485
Quality 485
Topping up 412

Entering characters 298
Function/notes 298

ESC (Electronic Stability Control)
see ESP® (Electronic Stability Program)

ESP®
Crosswind Assist 204

ESP® (Electronic Stability Program) 202
Activating/deactivating 204
Function/notes 202

Exterior lighting
Care 421

Exterior lighting
see Lights

Exterior mirrors 160, 161
Anti-glare mode (automatic) 161
Automatic mirror folding function 162
Folding in/out 160
Operating the memory function 120
Parking position 161
Setting 160

External device
Locking (child safety lock) 306

Eyeglasses compartment 128

F

Fatigue detection
see ATTENTION ASSIST

Favorites
Adding 296
Calling up 295
Deleting 296
Moving 296
Overview 295
Renaming 296

Flacon
Inserting/removing 168

Flat tire 425
Changing a wheel 471
MOExtended tires 426
Notes 425
TIREFIT kit 427

Flat towing
see Tow-bar system

Floor mats 147

Foil covering
Radar and ultrasonic sensors 200

Folding table 128

Fragrance
see Perfume atomizer
Free software 32
Frequencies
Two-way radio 479
Frequency band
Dialing (on-board computer) 271
Front airbag (driver, front passenger) 40
Front passenger head restraint
Installing/removing (chauffeur mode) 106
Front passenger seat 99
Adjusting from the driver's seat 99
Adjusting from the rear passenger compartment 99
Installing/removing the head restraint (chauffeur mode) 106
Front passenger seat
see Seat
Fuel 484
Additives 484
E10 483
Fuel reserve 484
Gasoline 483
Quality (gasoline) 483
Refueling 189
Sulfur content 483
Tank content 484
Fuel consumption
On-board computer 269
Function seat
see Door control panel
Function seat (rear passenger compartment)
see Seat (rear passenger compartment)
Fuses 442
Before replacing a fuse 442
Dashboard fuse box 444
Fuse assignment diagram 442
Fuse box in the engine compartment .. 443
Fuse box in the front-passenger footwell 444
Fuse box in the trunk 445
Notes 442
Fuses
see Fuses

G

Garage door opener
Clearing the memory 195
Opening or closing the door 195
Programming buttons 192
Radio equipment approval numbers 195
Resolving problems 194
Synchronizing the rolling code 194
Gas station search
Starting automatic search 318
Switching automatic search on/off 324
Using automatic search 324
Gasoline 483
Gearshift recommendation 187
Genuine parts 21
Glass roof
see MAGIC SKY CONTROL
Glide mode 188
Glove box
Air vent 171
Locking/unlocking 128

H

Handbrake
see Electric parking brake
Handling characteristics (unusual) 446
HANDS-FREE ACCESS 76
Hazard warning lights 152
Hazardous substances
Information 24
Head restraint
Attaching/removing the supplementary cushion 112
EASY ADJUST luxury head restraint (front) 110
Front (adjusting mechanically) 108
Front (luxury head restraint) 109
Rear (extending from the front) 110
Rear (setting the last position) 111
Rear passenger compartment (adjusting electrically) 113
Rear passenger compartment (adjusting) 111
Rear passenger compartment (lowering from the front) 110
Rear passenger compartment (luxury head restraint) 112
Rear passenger compartment (setting in position mechanically) 113
Head-up Display 273
Adjusting display elements (on-board computer) 273
Adjusting the brightness (on-board computer) 273
Function 274
Menu (on-board computer) 273
Operating the memory function 120
Setting the position (on-board computer) 273
Switching on/off 275
Headliner (care) 422
Headphones (Rear Seat Entertainment System)
Adjusting the volume 394
Overview 393
Replacing batteries 394
Selecting the rear display 394
Switching on/off 394
High beam
Switching on/off 151
High-beam flasher 151
High-beam headlamps
Adaptive Highbeam Assist 153
Hill start assist 225
HOLD function 225
Function/notes 225
Switching on/off 225
Hood
Function (active hood) 408
Opening/closing 409
Resetting (active hood) 408
Hotspot
Setting up (Wi-Fi) 304
Hydropneumatic suspension
see MAGIC BODY CONTROL

I

Identification plate
Engine 480
Refrigerant 488
Vehicle 480

Ignition
Switching on (Start/Stop button) 172
Ignition key
see SmartKey
Immobilizer 92
Indicator lamps
see Warning/indicator lamps
Individual drive program
Configuring 184
Selecting 183
Inside rearview mirror
see Exterior mirrors
Inspection
see ASSYST PLUS
Instrument cluster
see Instrument Display
Instrument cluster lighting 267
Instrument Display 263
Adjusting the lighting 267
Function/notes 263
Instrument cluster 10
Setting the additional value range 266
Warning/indicator lamps 541
Intelligent Light System
Adaptive Highbeam Assist 153
Cornering light function 153
Interior lighting 155
Ambient lighting 156
Reading light 155
Setting 155
Switch-off delay time 156
Interior motion sensor
Activating/deactivating 95
Function 94
Intermediate destination
Calculating a route with intermediate destinations 319
Entering 319
Modifying 319
Starting an automatic gas station search 318
Starting the automatic service station search 324
Internet
Calling up a web page 364
Closing the browser 365
Deleting a bookmark 365
Deleting browser data 365
Managing bookmarks 365
Internet connection
Communication module function 362
Connection status 363
Displaying the connection status 363
Displaying the status (Rear Seat Entertainment System) 399
Establishing 362
Information 361
Restrictions 361
Ionization
Activating/deactivating (multimedia system) 168
iPhone®
see Apple CarPlay®
see Mercedes-Benz Link

J

Jack
Storage location 470
Jump-start connection 435
General notes 433

K

KEYLESS-GO
Locking the vehicle ... 69
Problem ... 71
Unlocking setting ... 65
Unlocking the vehicle ... 69

Kickdown ... 188
Using ... 188

Knee airbag ... 40

L

Labeling (tires)
see Tire labeling

Lamp
see Interior lighting

Lamps (Instrument Display)
see Warning/indicator lamps

Lane detection (automatic)
see Active Lane Keeping Assist

Lane Keeping Assist
see Active Lane Keeping Assist

Language ... 306
Notes ... 306
Setting ... 306

LATCH-type (ISOFIX) child seat securing system
Installing ... 55

Level control system
see AIRMATIC
see MAGIC BODY CONTROL

Light switch
Overview ... 150

Lighting
see Interior lighting
see Lights

Lights ... 150
Adaptive Highbeam Assist ... 153
Adjusting the instrument lighting ... 267
Automatic driving lights ... 151
Combination switch ... 151
Cornering light function ... 153
Hazard warning lights ... 152
High beam ... 151
High-beam flasher ... 151
Light switch ... 150
Low-beam headlamps ... 150
Parking lights ... 150
Rear fog lamp ... 150
Responsibility for lighting systems ... 150
Setting the exterior lighting switch-off delay time ... 154
Setting the surround lighting ... 155
Standing lights ... 150
Turn signals ... 151

Limited Warranty
Vehicle ... 28

Live Traffic Information
Displaying subscription information ... 331
Displaying the traffic map ... 331
Displaying traffic incidents ... 332
Extending a subscription ... 331
Issuing hazard alerts ... 332

Load index (tires) ... 462

Load-bearing capacity (tires) ... 462

Loading
Definitions ... 464
Notes ... 125
Roof carrier ... 134
Stowage space under the trunk floor ... 133

Loading guidelines 125
Loading information table 454
Loads
Securing 125
Locator lighting
see Surround lighting
Locking/unlocking
Activating/deactivating the automatic locking feature 71
Emergency key 72
KEYLESS-GO 69
Unlocking and opening doors from the inside 69
Low-beam headlamps
Switching on/off 150
Lubricant additives
see Additives
Luggage
Net hooks 130
Securing 125

M

MAGIC BODY CONTROL 229
Setting 232
Suspension 229
MAGIC SKY CONTROL 87
Function 87
Operating 87
MAGIC VISION CONTROL
Windshield wipers 158
Maintenance
Menu (on-board computer) 268
Vehicle 23
Maintenance
see ASSYST PLUS
Malfunction
Parking Assist PARKTRONIC 235
Restraint system 34
Malfunction message
see Display message
Map 331, 333, 334
Avoiding an area 336
Avoiding an area (overview) 336
Changing an area 336
Deleting an area 337
Displaying the compass 338
Displaying the map version 335
Displaying the next intersecting street 335
Displaying the satellite map 338
Displaying the traffic map 331
Displaying weather information 338
Map data 337
Moving 334
Overview 333
Selecting POI symbols 335
Selecting text information 335
Selecting the map orientation 334
Setting the map scale 334
Setting the map scale automatically 338
Updating 337
Map and compass
Overview 333
Massage program
Overview 114
Resetting the settings 114
Massage programs
Selecting the front seats 114

Massage settings
Resetting 114
Matte finish (cleaning instructions) 417
Maximum load rating 461
Maximum permissible load
Calculation example 456
Determining 455
Maximum tire pressure 461
Mechanical key
Inserting/removing 66
Unlocking the trunk lid 79
Media
Menu (on-board computer) 272
Searching 374
Starting cinema mode 379
Media display
Notes 291
Media Interface
Activating 375
Information 374
Overview 375
Media mode
Activating 369
Media playback
Operating (on-board computer) 272
Media search
Starting 374
Media source
Selecting (on-board computer) 272
Medical aids 27
Memory function
Head-up Display – Calling up stored settings 120
Head-up Display – Storing settings 120
Operating 120
Outside mirrors – Calling up stored settings 120
Outside mirrors – Storing settings 120
Seat – Calling up stored settings 120
Seat – Storing settings 120
Steering wheel – Calling up saved settings 120
Steering wheel – Saving settings 120
Memory function in the rear passenger compartment
Operating rear seats 121
Operating the front passenger seat and rear seats 123
Menu (on-board computer)
Assistance 268
Designs 266
Head-up Display 273
Maintenance 268
Media 272
Navigation 270
Overview 264
Radio 271
Telephone 272
Trip 269
Mercedes me calls
Arranging a service appointment 357
Calling the Mercedes-Benz Customer Center 356
Consenting to data transfer 357
Information 356
Making a call via the overhead control panel 355
Transferred data 357
Mercedes me connect
Accident and breakdown management 358

Information 358
Transferred data 359

Mercedes-AMG vehicles
Notes 172

Mercedes-Benz Apps
Calling up 363
Using voice control 363

Mercedes-Benz emergency call system 359
Automatic emergency call 360
Information 359
Information on data transfer 361
Manual emergency call 360
Overview 359

Mercedes-Benz Link 350
Connecting 351
Ending 351
Overview 350
Using 351

Message (multifunction display)
see Display message

Message memory 492

Messages
Voice commands (Voice Control System) 287

Messages
see Text messages

Mirrors
see Exterior mirrors

Mobile phone
Wireless charging 146
Wireless charging (rear passenger compartment) 147

Mobile phone
see Android Auto
see Apple CarPlay®
see Mercedes-Benz Link
see Second telephone
see Telephone

Mobile phone voice recognition
Starting 345
Stopping 345

Model series
see Vehicle identification plate

MOExtended tires 426

Multifunction camera
ROAD SURFACE SCAN 231

Multifunction display
Overview of displays 267

Multifunction steering wheel
Overview of buttons 264

Multifunction steering wheel
see Steering wheel

Multimedia system 291
Activating/deactivating standby mode 200
Activating/deactivating voice amplification to rear passenger compartment 302
Adjusting the volume 297
Central control elements 292
Configuring display settings 300
Configuring drive program I 184
Damage detection (parked vehicle) 199
ENERGIZING COMFORT program (overview) 312
Favorites 295
Main functions 295
Overview 291

Rear climate control 167
Restoring the factory settings 311
Setting the footwell temperature 166
Standby mode function 200
Starting the ENERGIZING Comfort program 313
Switching the sound on/off 297

Multimedia system
see Entering characters
see Touch Control
see Touchpad

N

Navigation
Calling up the Digital Operator's Manual 339
Menu (on-board computer) 270
Showing/hiding the menu 314
Switching on 314
Updating the map data 337
Voice commands (Voice Control System) 280

Navigation
see Destination
see Destination entry
see Map
see Route
see Route guidance
see Traffic information

Navigation announcements
Activating/deactivating 327
Adjusting the volume 327
Repeating 328
Switching audio fadeout on/off 327

Navigation messages
On-board computer 270

Near Field Communication (NFC) 344
Connecting the mobile phone to the multimedia system 344
Information 344
Switching Bluetooth® audio equipment 379
Switching mobile phones 344
Using a mobile phone 344

Neutral
Inserting 185

NFC
see Near Field Communication (NFC)

Night view
see Night View Assist

Night View Assist 254
Automatic activation 255
Care 420
Function 254
Pedestrian detection 254
Spotlight function 255
Switching on/off 255

Non-operational time
Activating/deactivating standby mode 200
Standby mode function 200

Notes 176
Optimized acceleration 176

Notes on breaking-in a new vehicle 175

O

Occupant safety
Pets in the vehicle 63

Occupant safety
see Airbag
see Automatic front passenger front airbag shutoff

see PRE-SAFE® (anticipatory occupant protection)
see PRE-SAFE® PLUS (anticipatory occupant protection plus)
see Restraint system
see Seat belt

Odometer
see Total distance

Oil
see Engine oil

On-board computer 264
Assistance menu 268
Displaying the service due date 407
Head-up Display menu 273
Media menu 272
Menu designs 266
Menu overview 264
Multifunction display 267
Navigation system menu 270
Operating 264
Radio menu 271
Service menu 268
Telephone menu 272
Trip menu 269

On-board diagnostics interface
see Diagnostics connection

Online services
Data storage 30

Open-source software 32

Opening the trunk lid using your foot
HANDS-FREE ACCESS 76

Operating fluids
Additives (fuel) 484
Brake fluid 486
Coolant (engine) 486
Engine oil 484
Fuel (gasoline) 483
Notes 482
Refrigerant (air conditioning system) ... 488
Windshield washer fluid 488

Operating safety
Declaration of conformity (wireless vehicle components) 25
Information 24

Operating system
see On-board computer

Operator's Manual
Vehicle equipment 22

Operator's Manual (digital) 20

Optimized acceleration 176
Activating 176

Overhead control panel
Overview 12

P

Paint code 480

Paintwork (cleaning instructions) 417

Panel heating
Setting 116

Panic alarm 65
Activating/deactivating 65

Panoramic sliding sunroof
see Sliding sunroof

Parcel net hooks 130

Park position
Inserting 186
Selecting automatically 186

Parking
see Electric parking brake
Parking aid
see Parking Assist PARKTRONIC
Parking Assist PARKTRONIC 233
Activating 237
Adjusting warning tones 238
Function 233
Problems 235
Side impact protection 236
Switching off 237
System limitations 233
Parking assistance systems
see Active Parking Assist
Parking brake
see Electric parking brake
Parking for an extended period 199
Parking lights 150
Parking position
Exterior mirrors 161
Storing the position of the front-passenger outside mirror using reverse gear 162
PARKTRONIC
Malfunction 235
PASSENGER AIR BAG status display
see Automatic front passenger front airbag shutoff
Payload
Calculation example 456
Determining the maximum 455
Pedestrian protection
see Active hood (pedestrian protection)
Pennant holder
see Pennant staff
Pennant staff 148
Perfume
see Perfume atomizer
Perfume atomizer 168
Inserting/removing the flacon 168
Setting 168
Perfume vial
see Perfume atomizer
Permitted towing methods 436
Personalization
see User profile
Pets in the vehicle 63
Phone book
see Contacts
Picture formats
see Video mode
Picture settings
see Video mode
PIN protection
Activating/deactivating 307
Plastic trim (Care) 422
Playback options
Selecting 371
POI
Selecting 318
POI symbols
Selecting 335
Ports (Rear Seat Entertainment System)
Overview 396
Power closing function
Door 72
Trunk lid 74

Power supply
Switching on (Start/Stop button) 172
Power washer (care) 416
Power windows
see Side windows
PRE-SAFE® (anticipatory occupant protection) 48
Function 48
PRE-SAFE® Sound 48
Reversing measures 48
PRE-SAFE® PLUS (anticipatory occupant protection plus) 49
Function 49
Reversing measures 48
Preventative occupant protection system
see PRE-SAFE® (anticipatory occupant protection)
Previous destinations
Selecting 317
Protecting the environment
Notes 21
Protection against collision
see Drive Away Assist
Protection against theft
see ATA (anti-theft alarm system)
Pulling away
see Notes

Q

QR code
Rescue card 28
Qualified specialist workshop 26

R

Radar and ultrasonic sensors
Damage 200
Radio
Activating 379
Activating/deactivating radio text 382
Calling up the station list 381
Deleting stations 381
Direct frequency entry 381
Displaying information 382
Displaying radio text 382
Editing station presets 381
Menu (on-board computer) 271
Moving stations 381
Overview 380
Searching for stations 381
Setting a channel 381
Setting the waveband 381
Storing radio stations 381
Switching the HD Radio function on/off 381
Tagging music tracks 382
Voice commands (Voice Control System) 284
Radio stations
Dialing (on-board computer) 271
Rain closing function
Sliding sunroof 86
Range
Displaying 269
Reading light
see Interior lighting
Real wood (Care) 422
Rear climate control
Setting 167

Rear compartment Internet functions
Overview 399
Rear display
Activating/deactivating 306
Locking (child safety lock) 306
Overview 391
Setting the angle 391
Rear door (child safety lock) 61
Rear fog lamp
Switching on/off 151
Rear Seat Entertainment System
Activating media mode 403
Activating/deactivating the panel heating 398
Adjusting the ambient lighting 398
Adjusting the rear seats 396
Blu-ray drive 395
Blu-ray functions overview 403
Blu-ray/DVD menu 404
Climate control 396
Displaying destination information (navigation) 399
Dynamic range limitation 405
ENERGIZING comfort 397
Entertainment System settings 398
Headphones overview 393
Information about dynamic range limitation 405
Information about media mode 400
Inserting a disc 402
Internet connectivity status 399
Internet functions overview 399
Operating safety 389
Overview 390
Overview of massage and workout programs 396
Overview of the rear displays 391
Overview of the sound settings 405
Playback option in Blu-ray/DVD mode 404
Ports overview 396
Remote control overview 391
Resetting the rear seat 396
Selecting a film or track in Blu-ray/DVD mode 405
Selecting a massage program 396
Selecting the scene/chapter in Blu-ray/DVD mode 404
Setting the language 398
Switching navigation on 399
Switching off the display 398
Switching on the radio 405
Switching the display on/off 392
Switching to HDMI mode 405
Rear view camera 238
Care 421
Function 238
Opening the camera cover (360° Camera) 243
Setting favorites (360° Camera) 243
Rear window
Roller sunblind 91
Reflective safety vest 425
Refrigerant (air conditioning system)
Notes 488
Refrigerator box
Removing/installing 145
Using 143
Refueling
Refueling the vehicle 189
Remote control (Rear Seat Entertainment System)
Overview 391

Replacing batteries 393
Selecting a display 392
Switching the display on/off 392

Remote Online
Charging the battery 174
Cooling or heating the vehicle interior 174
Starting the vehicle 175

Reporting safety defects 28

Rescue card 28

Reserve
Fuel 484

Reset function (multimedia system) 311

Residual heat
Front 168
Rear passenger compartment 168

Restoring (factory settings)
see Reset function (multimedia system)

Restraint system 33
Basic instructions for children 49
Function in an accident 34
Functionality 34
Malfunction 34
Protection 33
Reduced protection 33
Self-test 34
Warning lamp 34

Reverse gear
Inserting 185

Rims (Care) 421

ROAD SURFACE SCAN
Multifunction camera 231

Roadside Assistance (breakdown) 23

Roll away protection
see HOLD function

Roller sunblind
Rear window 91
Side windows (electric) 91

Roof carrier
Attaching 134
Loading 134

Roof load 491

Route 322, 324
Calculating 322
Displaying destination information 323
Displaying destination information (Rear Seat Entertainment) 399
Planning 319
Selecting a type 322
Selecting an alternative route 324
Selecting notifications 323
Selecting options 323
Starting the automatic service station search 324
Switching the automatic gas station search on/off 324
Using automatic gas station search 324
With intermediate destinations 319

Route guidance 325
Canceling 328
Changing direction 326
Destination reached 327
From an off-road location 329
Lane recommendations 326
Notes 325
Off-road 329
To an off-road destination 328

Route-based speed adaptation
Displays in the Instrument Display 223
Function 217

Route-based speed adjustment
Setting 218
Run-flat characteristics
MOExtended tires 426

S

Safety systems
see Driving safety system
Satellite map 338
Satellite radio
Activating/deactivating TuneStart 386
Adding a channel to Smart Favorites ... 386
Deleting a channel 385
Displaying EPG information 385
Displaying service information 387
Information 382
Information about Smart Favorites and TuneStart 386
Logging in 382
Moving a channel 385
Music and sport alerts function 385
Overview 384
Pause and playback function 386
Restrictions 382
Selecting a category 384
Selecting a channel 385
Setting music and sport alerts 385
Setting the parental control 385
Storing a channel 385
Switching on 383
SD card
Inserting/removing 369
Seat 96
Adjusting (electrically) 96
Adjusting a reclining rear seat 102
Adjusting the front passenger seat from the driver's seat 99
Adjusting the front passenger seat from the rear passenger compartment 99
Configuring the settings 113
Correct driver's seat position 96
Massage program overview 114
Operating the memory function 120
Panel heating 116
Rear passenger compartment (adjusting electrically) 101
Resetting the settings 114
Setting automatic lateral support adjustment 114
Setting options 14
Setting the fully reclined position 102
Workout program overview 114
Seat
see Chauffeur mode
see Front passenger seat
Seat (rear passenger compartment) 16
Setting options 16
Seat belt 35
Protection 35
Seat belt adjustment
Activating/deactivating 40
Function 39
Seat belt buckle extender 40
Seat belt warning
see Seat belts
Seat belts 40
Activating/deactivating seat belt adjustment 40
Adjusting the height 39
Belt airbag 38

Care 422
Fastening 39
Reduced protection 37
Releasing 40
Seat belt adjustment (function) 39
Seat belt buckle extender 40
Warning lamp 40

Seat cover (Care) 422

Seat heating
Activating/deactivating 114

Seat ventilation
Activating/deactivating 116

Second telephone 342
Connecting 342
Features 342

Selecting a gear
see Changing gears

Selecting the sound profile
Burmester® high-end 3D surround sound system 389

Selector lever
see DIRECT SELECT lever

Self-test
Automatic front passenger front air-bag shutoff 45

Sensors (Care) 421

Service center
see Qualified specialist workshop

Service interval display
see ASSYST PLUS

Service station search
Starting automatic search 324

Setting a speed
see Cruise control

Setting summer time 301

Setting the date format 301

Setting the distance unit 307

Setting the footwell temperature
Setting 166

Setting the map scale
see Map

Shift paddles
see Steering wheel paddle shifters

Shifting gears
Gearshift recommendation 187

Short messages
see Text messages

Side airbag 40

Side impact protection 236

Side windows 79, 91
Child safety lock in the rear passenger compartment 63
Closing 79
Closing using the SmartKey 81
Convenience closing feature 81
Convenience opening 81
Opening 79
Opening with the SmartKey 81
Problem 82
Roller sunblind (electric) 91

Size designation (tires) 462

Sliding sunroof 83
Automatic functions 86
Closing 83
Closing using the SmartKey 81
MAGIC SKY CONTROL (function) 87
MAGIC SKY CONTROL (operating) 87

Opening ... 83
Opening with the SmartKey ... 81
Problem ... 88
Rain closing function ... 86

SmartKey ... 64
Acoustic locking verification signal ... 65
Battery ... 66
Energy consumption ... 65
Features ... 64
Key ring attachment ... 66
Mechanical key ... 66
Overview ... 64
Panic alarm ... 65
Problem ... 68
Unlocking setting ... 65

SmartKey functions
Deactivating ... 65

Smartphone
see Android Auto
see Apple CarPlay®
see Mercedes-Benz Link
see Telephone

Snow chains ... 447

Socket (12 V)
Rear passenger compartment ... 140
Trunk ... 142

Socket (115 V) ... 141
Rear passenger compartment ... 141

Software update ... 309
Information ... 309
Performing ... 310
System updates ... 310

Sound
PRE-SAFE® Sound ... 48
Wheels and tires ... 446

Sound
see Burmester® surround sound system
see Sound settings

Sound settings ... 387
Adjusting the balance/fader ... 387
Adjusting treble, mid-range and bass settings ... 387
Automatic volume adjustment ... 387
Calls up the sound menu ... 387
Information ... 387

Spare wheel
see Emergency spare wheel

Special seat belt retractor ... 55

Specialist workshop ... 26

Speech dialog system
see Voice Control System

Speed index (tires) ... 462

Speedometer
Digital ... 269

Spotlight function
Switching on/off ... 256

Standby mode
Activating/deactivating ... 200
Function ... 200

Standing lights ... 150

Start-off assist
see Optimized acceleration

Start/Stop button
Parking the vehicle ... 191
Starting the vehicle ... 173
Switching on the power supply or ignition ... 172

Start/stop function
see ECO start/stop function

Starting assistance
see Jump-start connection
Starting the engine
see Vehicle
Starting-off aid
see Hill start assist
Station
Deleting ... 381
Direct frequency entry ... 381
Moving ... 381
Searching ... 381
Setting ... 381
Storing ... 381
Station list
Calling up ... 381
Station presets
Modifying ... 381
STEER CONTROL
Function/notes ... 205
Steering wheel ... 264
Adjusting (electrically) ... 117
Buttons ... 264
Operating the memory function ... 120
Steering wheel heater ... 118
Steering wheel heater
Switching on/off ... 118
Steering wheel paddle shifters ... 186
Stowage areas
see Stowage compartment
Stowage compartment ... 127
Armrest ... 127
Center console ... 127
Door ... 127
Eyeglasses compartment ... 128
Folding table ... 128
Glove box ... 127
Parcel net hooks ... 130
Rear armrest ... 129
Rear passenger compartment center armrest ... 129
Rear seat backrest ... 129
Stowage compartments
see Stowage compartment
Stowage space under the trunk floor ... 133
Sulfur content ... 483
Sun visor
Operating ... 162
Surround lighting ... 155
Setting ... 155
Surround View
see 360° Camera
Suspension
Adjusting the chassis level (MAGIC BODY CONTROL) ... 232
Setting the suspension level (AIRMATIC) ... 228
Suspension
see AIRMATIC
see MAGIC BODY CONTROL
Suspension level (AIRMATIC)
Setting ... 228
Switch-off delay time
Exterior ... 154
Interior ... 156
Switching the surround sound on/off
Burmester® surround sound system ... 388

Synchronization function
Activating/deactivating (multimedia system) 167
System settings
Activating/deactivating PIN protection 307
Activating/deactivating voice amplification to rear passenger compartment 302
Reset function (multimedia system) 311
Setting the distance unit 307
Setting the time and date automatically 301
Setting the time zone 301
Setting the time/date format 301
Switching transmission of the vehicle position on/off 302
System settings
see Bluetooth®
see Data import/export
see Language
see Software update
see Wi-Fi

T

Table
see Folding table
Tailpipes (Care) 421
Tank content
Fuel 484
Reserve (fuel) 484
Technical data
Information 478
Vehicle identification plate 480
Telephone 272, 340
Activating functions during a call 345
Call and ringtone volume 345
Calls with several participants 345
Connecting a mobile phone (Near Field Communication (NFC)) 344
Connecting a mobile phone (Passkey) 341
Connecting a mobile phone (Secure Simple Pairing) 341
De-authorizing a mobile phone 343
Disconnecting a mobile phone 343
Importing contacts 347
Importing contacts (overview) 347
Incoming call during an existing call 346
Information 341
Interchanging mobile phones 342
Menu (on-board computer) 272
Mobile phone voice recognition 345
Notes 339
Operating modes 341
Reception and transmission volume 344
Switching mobile phones (Near Field Communication (NFC)) 344
Telephone menu overview 340
Telephone operation 345
Using Near Field Communication (NFC) 344
Voice commands (Voice Control System) 284
Wireless charging (mobile phone in the rear passenger compartment) 147
Wireless charging (mobile phone) 146
Telephone number
Dialing (on-board computer) 272
Telephony operating modes
Bluetooth® Telephony 341
Telephony operating modes
see Second telephone

Temperature grade 459
Text messages 349
Calling a message sender 350
Changing folders 350
Composing 349
Configuring the displayed text messages 349
Deleting 350
Drafts 350
Notes 349
Options 350
Outbox 350
Read-aloud function 349
Reading 349
Replying 350
Sending 349
Voice commands (Voice Control System) 287
Time
Manual time setting 301
Setting summer time 301
Setting the time and date automatically 301
Setting the time zone 301
Setting the time/date format 301
TIN (Tire Identification Number) 460
Tire and Loading Information placard ... 454
Tire characteristics 462
Tire inflation compressor
see TIREFIT kit
Tire information table 454
Tire labeling 459
Characteristics 462
DOT, Tire Identification Number (TIN) 460
Load index 462
Load-bearing capacity 462
Maximum tire load 461
Maximum tire pressure 461
Overview 459
Speed rating 462
Temperature grade 459
Tire Quality Grading 459
Tire size designation 462
Traction grade 459
Tread wear grade 459
Tire load (maximum) 461
Tire pressure 449, 450
Checking (manually) 450
Checking (tire pressure monitoring system) 452
Maximum 461
Notes 448
Restarting the tire pressure monitoring system 453
Tire pressure monitoring system (function) 451
Tire pressure table 449
TIREFIT kit 427
Tire pressure monitor 454
Function 451
Restarting 453
Tire pressure monitoring system
Checking the tire pressure 452
Tire pressure table 449
Tire Quality Grading 459
Tire temperature
Tire pressure monitoring system (function) 451
Tire tread 446

Tire-change tool kit
Overview 470
TIREFIT kit 427
Storage location 427
Using 427
Tires
Changing hub caps 471
Characteristics 462
Checking 446
Checking the tire pressure (manually) 450
Checking the tire pressure (tire pressure monitoring system) 452
Definitions 464
DOT, Tire Identification Number (TIN) 460
Flat tire 425
Installing 475
Load index 462
Load-bearing capacity 462
Maximum tire load 461
Maximum tire pressure 461
MOExtended tires 426
Noise 446
Notes on installing 467
Overview of tire labeling 459
Removing 474
Replacing 467, 471
Restarting the tire pressure monitoring system 453
Rotating 469
Selection 467
Snow chains 447
Speed rating 462
Storing 470
Temperature grade 459
Tire and Loading Information placard 454
Tire pressure (notes) 448
Tire pressure monitoring system (function) 451
Tire pressure table 449
Tire Quality Grading 459
Tire size designation 462
TIREFIT kit 427
Traction grade 459
Tread wear grade 459
Unusual handling characteristics 446
Toll system
Windshield 163
Tool
see Vehicle tool kit
Top Tether 57
Total distance 269
Displaying 269
Touch Control 292
On-board computer 264
Operating 292
Setting the sensitivity 292
Touchpad 293
Activating/deactivating haptic operation feedback 294
Operating 293
Reading the handwriting recognition aloud 294
Selecting a station and track 294
Setting the sensitivity 294
Switching on/off 293
Tow-away alarm
Activating/deactivating 94
Function 94
Tow-bar system 262
Tow-starting 442

Towing away 438
Towing eye
Installing 441
Storage location 441
Towing methods 436
Track
Selecting (audio mode) 371
Traction grade 459
Traffic information 330
Displaying the traffic map 331
Displaying traffic incidents 332
Extending a Live Traffic Information subscription 331
Issuing hazard warnings 332
Live Traffic Information 331
Overview 330
Traffic map
see Map
Traffic Sign Assist 251
Function/notes 251
Setting 253
System limitations 251
Transferred vehicle data
Android Auto 355
Apple CarPlay® 355
Transmission position display 184
Transporting
Loading guidelines 125
Vehicle 439
Tread wear grade 459
Trim element (Care) 422
Trip
Menu (on-board computer) 269
Trip computer
Displaying 269
Resetting 270
Trip distance 269
Displaying 269
Resetting 270
Trip odometer
see Trip distance
Trunk box
see EASY-PACK trunk box
Trunk lid
Activating/deactivating the tailgate opening height restriction 79
Closing 74
Emergency release (from inside) 78
HANDS-FREE ACCESS 76
Locking separately 78
Opening 73
Opening dimensions 489
Power closing function 74
Unlocking (mechanical key) 79
TuneIn
Calling up 366
Deleting stations 366
Logging out 367
Overview 366
Registering 367
Saving stations 366
Selecting and connecting to a station 366
Selecting stream 367
Setting options 367
Terms of use 367
Turn signal indicator
see Turn signals

Turn signals 151
Switching on/off 151
Two-way radios
Frequencies 479
Notes on installation 478
Transmission output (maximum) 479

U

Units of measurement
Setting 307
Unlocking setting 65
USB devices
Connecting 370
USB port 143
User profile 308
Creating 309
Importing/exporting 309
Options 309
Setting 308
Using the telephone
see Calls

V

Vehicle 173
Activating/deactivating standby mode 200
Correct use 27
Damage detection (parking) 199
Data acquisition 28
Data storage 28
Diagnostics connection 26
Equipment 22
Limited Warranty 28
Locking (automatically) 71
Locking (from the inside) 69
Locking (KEYLESS-GO) 69
Locking/unlocking (emergency key) 72
Lowering 476
Maintenance 23
Medical aids 27
Parking for an extended period 199
Problem notification 27
QR code rescue card 28
Qualified specialist workshop 26
Raising 472
Standby mode function 200
Starting (emergency operation mode) 173
Starting (Remote Online) 175
Starting (start/stop button) 173
Switching off (start/stop button) 191
Towing 262
Unlocking (from the inside) 69
Unlocking (KEYLESS-GO) 69
Ventilating (convenience opening) 81
Voice commands (Voice Control System) 288
Vehicle data
Displaying (DYNAMIC SELECT) 184
Roof load 491
Transferring to Android Auto 355
Transferring to Apple CarPlay® 355
Turning radius 489
Vehicle height 489
Vehicle length 489
Vehicle width 489
Wheelbase 489
Vehicle data storage
Event data recorders 31
Multimedia system/Mercedes me connect 31

Vehicle dimensions 489
Vehicle electronics
Notes 478
Two-way radios 478
Vehicle identification number
see VIN
Vehicle identification plate 480
Paint code 480
VIN 480
Vehicle interior
Cooling or heating (Remote Online) 174
Vehicle key
see SmartKey
Vehicle maintenance
see ASSYST PLUS
Vehicle operation
Outside the USA or Canada 23
Vehicle position
Switching transmission on/off 302
Vehicle tool kit 427
TIREFIT kit 427
Towing eye 441
Ventilating
Convenience opening 81
Vents
see Air vents
Video mode 374
Activating 371
Activating/deactivating full-screen mode 373
Overview 373
Settings 374
VIN 480
Identification plate 480
Seat 480
Windshield 480
Vision
Removing condensation from the windows 167
Windshield heater 169
Voice amplification to the rear passenger compartment
Activating/deactivating 302
Voice command types (Voice Control System) 278
Voice Control System 277
Application specific voice commands 278
Audible help functions 278
Global voice commands 278
Improving speech quality 278
Language setting 278
Media player voice commands 286
Message voice commands 287
Multifunction steering wheel (operating) 277
Navigation voice commands 280
Operable functions 278
Operating safety 276
Radio voice commands 284
Switch voice commands 279
Telephone voice controls 284
Text message voice commands 287
Types of voice commands 278
Vehicle voice commands 288
Voice prompting 277
Voice control system
see Voice Control System

W

Warning lamps
see Warning/indicator lamps

Warning system
see ATA (anti-theft alarm system)

Warning/indicator lamp
ABS warning lamp 551
BRAKE Brake warning lamp (USA) 549
Brakes warning lamp (Canada) ... 549
Coolant warning lamp 545
Electrical malfunction warning lamp 546
Engine diagnosis warning lamp .. 546
ESP® OFF warning lamp 553
ESP® warning lamp flashes 552
ESP® warning lamp lights up 552
Fuel reserve warning lamp 547
Red indicator lamp, electric parking brake applied (Canada only) ... 548
PARK Red indicator lamp, electric parking brake applied (USA only) 548
Restraint system warning lamp .. 543
Seat belt warning lamp flashes .. 543
Seat belt warning lamp lights up 544
Suspension warning lamp 550
Tire pressure monitoring system warning lamp flashes 554
Tire pressure monitoring system warning lamp lights up 554
Warning lamp for distance warning function 550
Warning lamp for electric power steering 544
Yellow electric parking brake indicator lamp is malfunctioning 548

Warning/indicator lamps 541
Overview 541
PASSENGER AIR BAG 45

Warranty 28

Washer fluid
see Windshield washer fluid

Washing by hand (care) 416

Water tank
see Air-water duct

Weather information 338

Web browser
Calling up a web page 364
Calling up options 365
Calling up the settings 365
Deleting a bookmark 365
Deleting browser data 365
Ending 365
Managing bookmarks 365
Overview 364
Showing/hiding the menu 364

Website
Calling up 364
Showing/hiding the web browser menu 364

what3words
Destination entry with a 3 word address 320

Wheel change
Lowering the vehicle 476
Mounting a new wheel 475
Removing a wheel 474
Removing/installing hub caps 471

Wheel rotation 469

Wheels
Care 421
Changing hub caps 471
Checking 446
Checking the tire pressure (manually) 450
Checking the tire pressure (tire pressure monitoring system) 452
Definitions 464
DOT, Tire Identification Number (TIN) 460
Flat tire 425
Installing 475
Load index 462
Load-bearing capacity 462
Maximum tire load 461
Maximum tire pressure 461
MOExtended tires 426
Noise 446
Notes on installing 467
Overview of tire labeling 459
Removing 474
Replacing 467, 471
Restarting the tire pressure monitoring system 453
Rotating 469
Selection 467
Snow chains 447
Speed rating 462
Storing 470
Temperature grade 459
Tire and Loading Information placard 454
Tire characteristics 462
Tire pressure (notes) 448
Tire pressure monitoring system (function) 451
Tire pressure table 449
Tire Quality Grading 459
Tire size designation 462
TIREFIT kit 427
Traction grade 459
Tread wear grade 459
Unusual handling characteristics 446

Wi-Fi 303
Overview 303
Setting 303
Setting up a hotspot 304

Window curtain airbag 40

Windows
see Side windows

Windows (Care) 421

Windshield 157, 158
Infrared reflective 163
Radio waves 163
Replacing the wiper blades 157
Replacing wiper blades (MAGIC VISION CONTROL) 158

Windshield
see Windshield

Windshield heater 169

Windshield heating
see Windshield heater

Windshield washer fluid 488
Notes 488

Windshield washer system
Topping up 414
Windshield wipers
Activating/deactivating 157
Replacing the wiper blades 157
Replacing wiper blades (MAGIC VISION CONTROL) 158
Winter operation
Snow chains 447
Wiper blades
Care 421
Replacing 157
Replacing (MAGIC VISION CONTROL) 158
Wireless charging
Function/notes 145
Mobile phone 146
Mobile phone (rear passenger compartment) 147
Wireless vehicle components
Declaration of conformity 25
Workout program
Overview 114
Workshop
see Qualified specialist workshop